IN OR 34 PG 437
LESS R/W IN OR 68 PG 125
EMMA LOVE HARDEE

NASSAU COUNTY SCHOOL BOARD/
(EMMA LOVE HARDEE ELEMENTARY), 1201 ATLANTIC AVENUE
FERNANDINA BEACH, FL 32034

2026

29-3N-28-0000-0004-0010

BUILDING CHARACTERISTICS

ELEMENT	CD	CONSTRUCTION
Exterior Wall	19	COMMON BRK 100
Roof Structur	01	FLAT 100
Roof Cover	04	BUILT-UP 100
Interior Wall	01	MINIMUM 100
Interior Floo	06	VINYL ASB 100
Ceiling	01	FIN.SUSPD 100
Air Condition	06	ENG CENTRL 100
Heating Type	04	AIR DUCTED 100
Fixtures		20 100
Frame	04	REIN CONC 100
Story Height		0 100
RMS		1 100
Stories	0	0 100
Units		0 100
BUD8 Adjustme	02	DIST FB 100
Occupancy	00	NONE 100
Quality	03	Quality Level 03

DOR CODE	8300	PUBLIC SCHOOLS	
MAP NUM		MKT AREA	01
NEIGHBORHOOD/LOC	1010.00		

AREA TYPE	TOTAL GROSS AREA	PCT OF BASE	YEAR	TOT ADJ AREA	SUBAREA MARKET VALUE
BAS	140	100	1993	140	14,552
BAS	9,999	100	1993	9,999	1,039,346
CAN	812	30	1993	244	25,363
CAN	9,999	30	1993	3,000	311,835
CAN	9,999	30	1993	3,000	311,835
CAN	9,999	30	1993	3,000	311,835
CAN	9,999	30	1993	3,000	311,835
TOTALS	50,947			22,383	2,326,602

MARKET ADJUSTMENTS

TYPE	MDL	EFF. AREA	TOT ADJ PTS	EFF. BASE RATE	REPL. COST NEW	AYB	EYB	ECON	FNCT		NORM	% COND
7201	04	22,383	82.8000	171.81	3,845,623	1966	1966	0	0	0	39.50	60.50

1 SCHOOL 0% - 0 Heated Area: 10139 HX Base Yr

2200 SUSAN DR, FERNANDINA BEACH

BLD DATE	06/20/2016 KK	LGL DATE	
XF DATE		LAND DATE	06/21/2024 TD
INC DATE		AG DATE	

NASSAU COUNTY PROPERTY

PAGE 1 of 6 2

VALUATION SUMMARY

VALUATION BY		STANDARD
Tax Group: 2	Tax Dist:	
BUILDING MARKET VALUE		6,290,867
TOTAL MARKET OB/XF VALUE		242,802
TOTAL LAND VALUE - MARKET		2,582,000
TOTAL MARKET VALUE		9,115,669
SOH/AGL Deduction		2,053,784
ASSESSED VALUE		7,061,885
TOTAL EXEMPTION VALUE	01	7,061,885
BASE TAXABLE VALUE		0
TOTAL JUST VALUE		9,115,669
NCON VALUE		0
INCOME VALUE		
PREVIOUS YEAR MKT VALUE		8,798,268

PERMIT NUM	DESCRIPTION	AMT	ISSUED

SALES DATA

OFF RECORD Number	DATE	TYPE INST	Q U /	V I /	RSN CD	SALE PRICE

BUILDING NOTES

BUILDING DIMENSIONS

BAS=[YR=1993] 9999$ BAS=[YR=1993] 140$ CAN=[YR=1993] 9999$ CAN=[YR=1993] 9999$ CAN=[YR=1993] 9999$ CAN=[YR=1993] 9999$ CAN=[YR=1993] 812$.

EXTRA FEATURES

LN	OB/XF CODE	DESCRIPTION	BLD	CAP	L	W	UNITS	UT	Adj R	ADJ UNIT PRICE	ORIG COND	YEAR ON	YEAR ACTUAL	Q	% COND	OB/XF MKT VALUE	NOTES
1	0803	ASPHALT C	0	0	0	0	23,693.00	SF	2.00	2.00	100	1990	1990	3	50	23,693	
2	0803	ASPHALT C	0	0	0	0	11,762.00	SF	2.00	2.00	100	1990	1990	3	50	11,762	
3	0803	ASPHALT C	0	0	0	0	4,235.00	SF	2.00	2.00	100	1990	1990	3	50	4,235	
4	0803	ASPHALT C	0	0	0	0	25,322.00	SF	2.00	2.00	100	2016	2016	3	74	37,477	
5	0400	CONC CURB	0	0	0	0	678.00	LF	15.00	15.00	100	2016	2016	3	96	9,763	
6	0812	CONCRETE C	0	0	0	0	1,763.00	SF	4.00	4.00	100	2016	2016	3	95	6,699	
7	0402	CONC BUMPE	0	0	0	0	22.00	UT	25.00	25.00	100	2016	2016	3	96	528	
8	0810	CONCRETE A	0	0	0	0	140.00	SF	6.50	6.50	100	2016	2016	3	95	865	
9	0972	ST LGHT UN	0	0	0	0	2.00	UT	2,530.00	2,530.00	100	2016	2016	3	87	4,402	
10	0975	ST LT/ARM	0	0	0	0	2.00	UT	500.00	500.00	100	2016	2016	3	87	870	

TOTAL OB/XF 100,294

LAND DESCRIPTION

LN	USE CODE	CLS	LAND USE DESCRIPTION	CAP	RD	LOC ZONE	FRONT	DEPTH	TOT LND UTS	UNIT TYPE	DT	DPTH FACT	% COND	TOT ADJ	UNIT PRICE	ADJ UNIT PRICE	LAND VALUE	OTHER ADJUSTMENTS AND NOTES	YEAR	DENSITY	DECL	FRZ	YR	CONSRV
1	008300	C	SCHOOL	0		PI-1	0.00	0.00	12.91	AC		1.00	1.00	1.00	200,000.00	200,000.00	2,582,000							

REVIEW DATE 01/06/2023 BY HSA Total Acres: 12.91 Total Land Value: 2,582,000 Market: 0 Agricultural: 0 Common: 2,582,000 PRINTED 07/09/2026 BY SYS

IN OR 34 PG 437
LESS R/W IN OR 68 PG 125
EMMA LOVE HARDEE

NASSAU COUNTY SCHOOL BOARD/
(EMMA LOVE HARDEE ELEMENTARY), 1201 ATLANTIC AVENUE
FERNANDINA BEACH, FL 32034

2026

29-3N-28-0000-0004-0010

NASSAU COUNTY PROPERTY

BUILDING CHARACTERISTICS

ELEMENT	CD	CONSTRUCTION
Exterior Wall	05	AVERAGE 100
Roof Structur	04	WOOD TRUSS 100
Roof Cover	03	COMP SHNGL 100
Interior Wall	05	DRYWALL 100
Interior Floo	07	CORK/VTILE 100
Ceiling	02	F.NOT SUS 100
Air Condition	02	WINDOW 100
Heating Type	04	AIR DUCTED 100
Fixtures		0 100
Frame	02	WOOD FRAME 100
Story Height		11 100
RMS		0 100
Stories	1.	1. 100
Units		0 100
Occupancy	00	NONE 100
Quality	03	Quality Level 03

DOR CODE	8300	PUBLIC SCHOOLS	
MAP NUM		MKT AREA	01
NEIGHBORHOOD/LOC	1010.00		

AREA TYPE	TOTAL GROSS AREA	PCT OF BASE	YEAR	TOT ADJ AREA	SUBAREA MARKET VALUE
BAS	840	100	1993	840	122,034
UOP	36	20	1993	7	1,017
TOTALS	876			847	123,051

MARKET ADJUSTMENTS

TYPE	MDL	EFF. AREA	TOT ADJ PTS	EFF. BASE RATE	REPL. COST NEW	AYB	EYB	ECON	FNCT		NORM	% COND
7201	04	847	83.3490	172.95	146,489	1990	1990	0	0	0	16.00	84.00

2 SCHOOL 0% - 0 Heated Area: 840 HX Base Yr

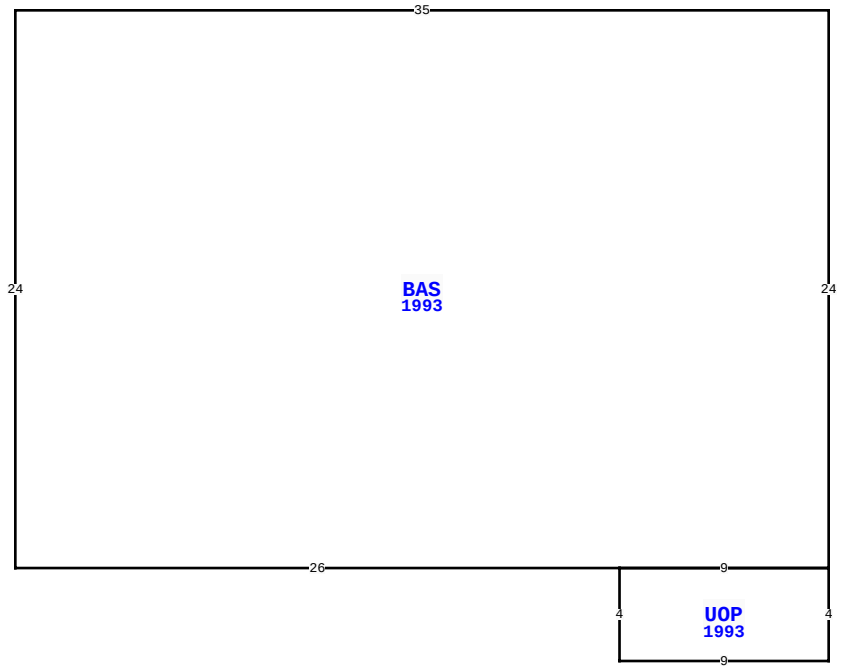

BLD DATE	06/20/2016 KK	LGL DATE	
XF DATE		LAND DATE	06/21/2024 TD
INC DATE		AG DATE	

2200 SUSAN DR, FERNANDINA BEACH

VALUATION SUMMARY

VALUATION BY		STANDARD
Tax Group: 2	Tax Dist:	
BUILDING MARKET VALUE		6,290,867
TOTAL MARKET OB/XF VALUE		242,802
TOTAL LAND VALUE - MARKET		2,582,000
TOTAL MARKET VALUE		9,115,669
SOH/AGL Deduction		2,053,784
ASSESSED VALUE		7,061,885
TOTAL EXEMPTION VALUE	01	7,061,885
BASE TAXABLE VALUE		0
TOTAL JUST VALUE		9,115,669
NCON VALUE		0
INCOME VALUE		
PREVIOUS YEAR MKT VALUE		8,798,268

PERMIT NUM	DESCRIPTION	AMT	ISSUED

SALES DATA

OFF RECORD Number	DATE	TYPE INST	Q U	V I	RSN CD	SALE PRICE

BUILDING NOTES

BUILDING DIMENSIONS

BAS=[YR=1993] W35 S24 E26 UOP=[YR=1993] S4 E9 N4 W9$ E9 N24$.

EXTRA FEATURES

LN	OB/XF CODE	DESCRIPTION	BLD	CAP	L	W	UNITS	UT	Adj R	ADJ UNIT PRICE	ORIG COND	YEAR ON	YEAR ACTUAL	Q	% COND	OB/XF MKT VALUE	NOTES
11	0424	CL FNC 6'	0	0	0	0	534.00	LF	20.00	20.00	100	2016	2016	3	87	9,292	
12	0463	FENCE GATE	0	0	0	0	4.00	UT	300.00	300.00	100	2016	2016	3	87	1,044	
13	0810	CONCRETE A	0	0	12	9	108.00	SF	6.50	6.50	100	2010	2010	3	89	625	
14	0402	CONC BUMPE	0	0	0	0	16.00	UT	25.00	25.00	100	2010	2010	3	92	368	
15	0812	CONCRETE C	0	0	0	0	2,207.00	SF	4.00	4.00	100	1990	1990	3	54.5	4,811	
16	0402	CONC BUMPE	0	0	0	0	10.00	UT	25.00	25.00	100	1990	1990	3	64	160	
17	0400	CONC CURB	0	0	0	0	721.00	LF	15.00	15.00	100	1990	1990	3	64	6,922	
18	0972	ST LGHT UN	0	0	0	0	1.00	UT	2,530.00	2,530.00	100	2000	2000	3	45	1,139	
19	0810	CONCRETE A	0	0	0	0	144.00	SF	6.50	6.50	100	1990	1990	3	54.5	510	
20	0424	CL FNC 6'	0	0	0	0	48.00	LF	20.00	20.00	100	2010	2010	3	74	710	

TOTAL OB/XF 25,581

LAND DESCRIPTION

LN	USE CODE	CLS	LAND USE DESCRIPTION	CAP	RD	LOC ZONE	FRONT	DEPTH	TOT LND UTS	UNIT TYPE	DT	DPTH FACT	% COND	TOT ADJ	UNIT PRICE	ADJ UNIT PRICE	LAND VALUE	OTHER ADJUSTMENTS AND NOTES	YEAR	DENSITY	DECL	FRZ	YR	CONSRV

REVIEW DATE 01/06/2023 BY HSA Total Acres: 12.91 Total Land Value: 2,582,000 Market: 0 Agricultural: 0 Common: 2,582,000 PRINTED 07/09/2026 BY SYS

IN OR 34 PG 437
LESS R/W IN OR 68 PG 125
EMMA LOVE HARDEE

NASSAU COUNTY SCHOOL BOARD/
(EMMA LOVE HARDEE ELEMENTARY), 1201 ATLANTIC AVENUE
FERNANDINA BEACH, FL 32034

2026

29-3N-28-0000-0004-0010

NASSAU COUNTY PROPERTY

BUILDING CHARACTERISTICS

ELEMENT	CD	CONSTRUCTION
Exterior Wall	15	CONC BLOCK 100
Roof Structur	04	WOOD TRUSS 100
Roof Cover	03	COMP SHNGL 100
Interior Wall	01	MINIMUM 100
Interior Floo	03	CONC FINSH 100
Ceiling	02	F.NOT SUS 100
Air Condition	03	CENTRAL 100
Heating Type	04	AIR DUCTED 100
Fixtures		0 100
Frame	03	MASONRY 100
Story Height		0 100
RMS		0 100
Stories	1.	1. 100
Units		0 100
Occupancy	00	NONE 100
Quality	03	Quality Level 03
DOR CODE	8300	PUBLIC SCHOOLS
MAP NUM		MKT AREA 01
NEIGHBORHOOD/LOC	1010.00	

AREA TYPE	TOTAL GROSS AREA	PCT OF BASE	YEAR	TOT ADJ AREA	SUBAREA MARKET VALUE
BAS	1,008	100	1993	1,008	107,227
CAN	180	30	1993	54	5,744
CAN	180	30	1993	54	5,744
TOTALS	1,368			1,116	118,716

MARKET ADJUSTMENTS

TYPE	MDL	EFF. AREA	TOT ADJ PTS	EFF. BASE RATE	REPL. COST NEW	AYB	EYB	ECON	FNCT		NORM	% COND
7201	04	1,116	66.1500	137.26	153,182	1980	1980	0	0	0	22.50	77.50

3 SCHOOL 0% - 0 Heated Area: 1008 HX Base Yr

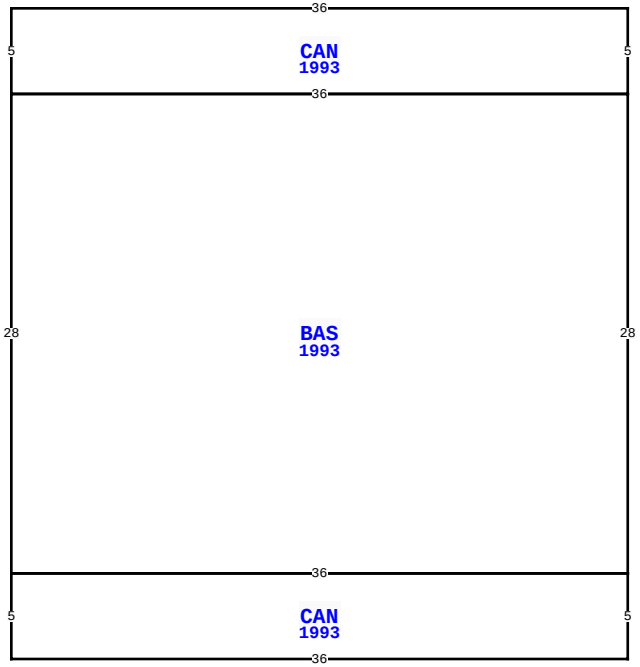

BLD DATE	06/20/2016 KK	LGL DATE	
XF DATE		LAND DATE	06/21/2024 TD
INC DATE		AG DATE	

2200 SUSAN DR, FERNANDINA BEACH

VALUATION SUMMARY

VALUATION BY		STANDARD
Tax Group: 2	Tax Dist:	
BUILDING MARKET VALUE		6,290,867
TOTAL MARKET OB/XF VALUE		242,802
TOTAL LAND VALUE - MARKET		2,582,000
TOTAL MARKET VALUE		9,115,669
SOH/AGL Deduction		2,053,784
ASSESSED VALUE		7,061,885
TOTAL EXEMPTION VALUE	01	7,061,885
BASE TAXABLE VALUE		0
TOTAL JUST VALUE		9,115,669
NCON VALUE		0
INCOME VALUE		
PREVIOUS YEAR MKT VALUE		8,798,268

PERMIT NUM	DESCRIPTION	AMT	ISSUED

SALES DATA

OFF RECORD Number	DATE	TYPE INST	Q U /	V I /	RSN CD	SALE PRICE

BUILDING NOTES

BUILDING DIMENSIONS

CAN=[YR=1993] W36 S5 BAS=[YR=1993] S28 CAN=[YR=1993] S5 E36 N5 W36$ E36 N28 W36$ E36 N5$.

EXTRA FEATURES

LN	OB/XF CODE	DESCRIPTION	BLD	CAP	L	W	UNITS	UT	Adj R	ADJ UNIT PRICE	ORIG COND	YEAR ON	YEAR ACTUAL	Q	% COND	OB/XF MKT VALUE	NOTES
21	0463	FENCE GATE	0	0	0	0	2.00	UT	300.00	300.00	100	2010	2010	3	74	444	
22	0400	CONC CURB	0	0	0	0	596.00	LF	15.00	15.00	100	1990	1990	3	64	5,722	
23	0812	CONCRETE C	0	0	0	0	1,962.00	SF	4.00	4.00	100	1990	1990	3	54.5	4,277	
24	0811	CONCRETE B	0	0	0	0	928.00	SF	5.20	5.20	100	1990	1990	3	54.5	2,630	
25	0505	FLAGPOLE A	0	0	0	0	25.00	LF	50.00	50.00	100	2005	2005	3	21	263	
26	0424	CL FNC 6'	0	0	0	0	47.00	LF	20.00	20.00	100	2005	2005	3	61	573	
27	0463	FENCE GATE	0	0	0	0	2.00	UT	300.00	300.00	100	2005	2005	3	61	366	
28	0400	CONC CURB	0	0	0	0	46.00	LF	15.00	15.00	100	1990	1990	3	64	442	
29	0810	CONCRETE A	0	0	0	0	164.00	SF	6.50	6.50	100	1990	1990	3	54.5	581	
30	0424	CL FNC 6'	0	0	0	0	386.00	LF	20.00	20.00	100	1990	1990	3	25	1,930	

TOTAL OB/XF 17,228

LAND DESCRIPTION

LN	USE CODE	CLS	LAND USE DESCRIPTION	CAP	RD	LOC ZONE	FRONT	DEPTH	TOT LND UTS	UNIT TYPE	DT	DPTH FACT	% COND	TOT ADJ	UNIT PRICE	ADJ UNIT PRICE	LAND VALUE	OTHER ADJUSTMENTS AND NOTES	YEAR	DENSITY	DECL	FRZ	YR	CONSRV

REVIEW DATE 01/06/2023 BY HSA Total Acres: 12.91 Total Land Value: 2,582,000 Market: 0 Agricultural: 0 Common: 2,582,000 PRINTED 07/09/2026 BY SYS

IN OR 34 PG 437
LESS R/W IN OR 68 PG 125
EMMA LOVE HARDEE

NASSAU COUNTY SCHOOL BOARD/
(EMMA LOVE HARDEE ELEMENTARY), 1201 ATLANTIC AVENUE
FERNANDINA BEACH, FL 32034

2026

29-3N-28-0000-0004-0010

NASSAU COUNTY PROPERTY

BUILDING CHARACTERISTICS

ELEMENT	CD	CONSTRUCTION
Exterior Wall	15	CONC BLOCK 100
Roof Structur	04	WOOD TRUSS 100
Roof Cover	03	COMP SHNGL 100
Interior Wall	01	MINIMUM 100
Interior Floo	03	CONC FINSH 100
Ceiling	01	FIN.SUSPD 100
Air Condition	03	CENTRAL 100
Heating Type	04	AIR DUCTED 100
Fixtures		0 100
Frame	03	MASONRY 100
Story Height		9 100
RMS		0 100
Stories	1.	1. 100
Units		0 100
Occupancy	00	NONE 100
Quality	03	Quality Level 03
DOR CODE	8300	PUBLIC SCHOOLS
MAP NUM		MKT AREA 01
NEIGHBORHOOD/LOC	1010.00	

AREA TYPE	TOTAL GROSS AREA	PCT OF BASE	YEAR	TOT ADJ AREA	SUBAREA MARKET VALUE
BAS	2,856	100	1993	2,856	310,960
CAN	510	30	1993	153	16,659
PTO	9	5	1993	0	0
PTO	25	5	1993	1	109
PTO	25	5	1993	1	109
PTO	25	5	1993	1	109
TOTALS	3,450			3,012	327,946

MARKET ADJUSTMENTS

TYPE	MDL	EFF. AREA	TOT ADJ PTS	EFF. BASE RATE	REPL. COST NEW	AYB	EYB	ECON	FNCT		NORM	% COND
7201	04	3,012	67.7040	140.49	423,156	1980	1980	0	0	0	22.50	77.50

4 SCHOOL 0% - 0 Heated Area: 2856 HX Base Yr

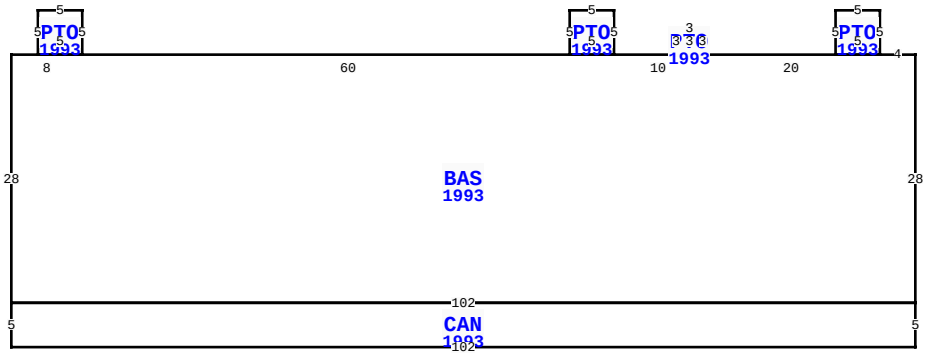

2200 SUSAN DR, FERNANDINA BEACH

BLD DATE	06/20/2016 KK	LGL DATE	
XF DATE		LAND DATE	06/21/2024 TD
INC DATE		AG DATE	

VALUATION SUMMARY

VALUATION BY		STANDARD
Tax Group: 2	Tax Dist:	
BUILDING MARKET VALUE		6,290,867
TOTAL MARKET OB/XF VALUE		242,802
TOTAL LAND VALUE - MARKET		2,582,000
TOTAL MARKET VALUE		9,115,669
SOH/AGL Deduction		2,053,784
ASSESSED VALUE		7,061,885
TOTAL EXEMPTION VALUE	01	7,061,885
BASE TAXABLE VALUE		0
TOTAL JUST VALUE		9,115,669
NCON VALUE		0
INCOME VALUE		
PREVIOUS YEAR MKT VALUE		8,798,268

PERMIT NUM	DESCRIPTION	AMT	ISSUED

SALES DATA

OFF RECORD Number	DATE	TYPE INST	Q U /	V I /	RSN CD	SALE PRICE

BUILDING NOTES

BUILDING DIMENSIONS

BAS=[YR=1993] W4 PTO=[YR=1993] N5 W5 S5 E5$ W20 PTO=[YR=1993] N3 W3 S3 E3$ W10 PTO=[YR=1993] N5 W5 S5 E5$ W60 PTO=[YR=1993] N5 W5 S5 E5$ W8 S28 CAN=[YR=1993] S5 E102 N5 W102$ E102 N28$.

EXTRA FEATURES

LN	OB/XF CODE	DESCRIPTION	BLD	CAP	L	W	UNITS	UT	Adj R	ADJ UNIT PRICE	ORIG COND	YEAR ON	YEAR ACTUAL	Q	% COND	OB/XF MKT VALUE	NOTES
31	0430	CL FNC 6B	0	0	0	0	192.00	LF	9.70	9.70	100	1990	1990	3	25	466	
32	0430	CL FNC 6B	0	0	0	0	306.00	LF	9.70	9.70	100	1990	1990	3	25	742	
33	0424	CL FNC 6'	0	0	0	0	128.00	LF	20.00	20.00	100	1990	1990	3	25	640	
34	0424	CL FNC 6'	0	0	0	0	120.00	LF	20.00	20.00	100	2015	2015	3	85	2,040	
35	0463	FENCE GATE	0	0	0	0	2.00	UT	300.00	300.00	100	2015	2015	3	85	510	
36	0351	CARPORT MT	0	0	30	30	900.00	SF	10.00	10.00	100	2005	2005	3	21	1,890	
37	0681	POLE SHED	0	0	12	12	144.00	SF	15.00	15.00	100	1995	1995	3	20	432	
38	0812	CONCRETE C	0	0	0	0	2,737.00	SF	4.00	4.00	100	2000	2000	3	75	8,211	
39	0812	CONCRETE C	0	0	80	30	2,400.00	SF	4.00	4.00	100	2015	2015	3	94	9,024	
40	0811	CONCRETE B	0	0	0	0	780.00	SF	5.20	5.20	100	2015	2015	3	94	3,813	

TOTAL OB/XF 27,768

LAND DESCRIPTION

LN	USE CODE	CLS	LAND USE DESCRIPTION	CAP	RD	LOC ZONE	FRONT	DEPTH	TOT LND UTS	UNIT TYPE	DT	DPTH FACT	% COND	TOT ADJ	UNIT PRICE	ADJ UNIT PRICE	LAND VALUE	OTHER ADJUSTMENTS AND NOTES	YEAR	DENSITY	DECL	FRZ	YR	CONSRV

REVIEW DATE 01/06/2023 BY HSA Total Acres: 12.91 Total Land Value: 2,582,000 Market: 0 Agricultural: 0 Common: 2,582,000 PRINTED 07/09/2026 BY SYS

IN OR 34 PG 437
LESS R/W IN OR 68 PG 125
EMMA LOVE HARDEE

NASSAU COUNTY SCHOOL BOARD/
(EMMA LOVE HARDEE ELEMENTARY), 1201 ATLANTIC AVENUE
FERNANDINA BEACH, FL 32034

2026

29-3N-28-0000-0004-0010

NASSAU COUNTY PROPERTY

BUILDING CHARACTERISTICS

ELEMENT	CD	CONSTRUCTION
Exterior Wall	19	COMMON BRK 100
Roof Structur	09	RIDGE FRME 100
Roof Cover	04	BUILT-UP 100
Interior Wall	05	DRYWALL 100
Interior Floo	07	CORK/VTILE 100
Ceiling	01	FIN.SUSPD 100
Air Condition	04	ROOF TOP 100
Heating Type	04	AIR DUCTED 100
Fixtures		0 100
Frame	03	MASONRY 100
Story Height		13 100
RMS		0 100
Stories	1.	1. 100
Units		0 100
Occupancy	00	NONE 100
Quality	03	Quality Level 03
DOR CODE	8300	PUBLIC SCHOOLS
MAP NUM		MKT AREA 01
NEIGHBORHOOD/LOC	1010.00	

AREA TYPE	TOTAL GROSS AREA	PCT OF BASE	YEAR	TOT ADJ AREA	SUBAREA MARKET VALUE
BAS	19,535	100	2010	19,535	3,286,216
CAN	21	30	2010	6	1,009
CAN	36	30	2010	11	1,850
CAN	210	30	2010	63	10,598
CAN	285	30	2010	86	14,467
CAN	1,576	30	2010	473	79,569
PTO	35	5	2010	2	336
PTO	60	5	2010	3	505
TOTALS	21,758			20,179	3,394,552

MARKET ADJUSTMENTS

TYPE	MDL	EFF. AREA	TOT ADJ PTS	EFF. BASE RATE	REPL. COST NEW	AYB	EYB	ECON	FNCT		NORM	% COND
7201	04	20,179	93.9930	195.04	3,935,712	2010	2010	0	0	0	13.75	86.25

5 SCHOOL 0% - 0 Heated Area: 19535 HX Base Yr

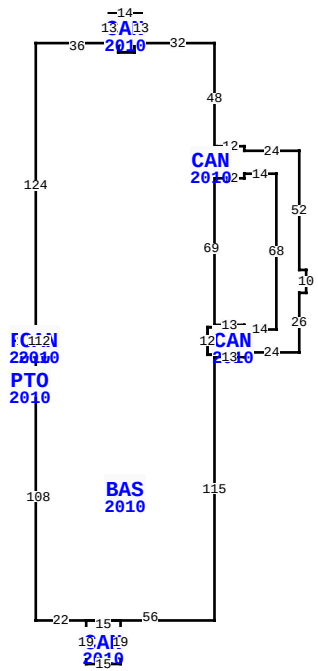

2200 SUSAN DR, FERNANDINA BEACH

BLD DATE	06/20/2016 KK	LGL DATE	
XF DATE		LAND DATE	06/21/2024 TD
INC DATE		AG DATE	

VALUATION SUMMARY

VALUATION BY		STANDARD
Tax Group: 2	Tax Dist:	
BUILDING MARKET VALUE		6,290,867
TOTAL MARKET OB/XF VALUE		242,802
TOTAL LAND VALUE - MARKET		2,582,000
TOTAL MARKET VALUE		9,115,669
SOH/AGL Deduction		2,053,784
ASSESSED VALUE		7,061,885
TOTAL EXEMPTION VALUE	01	7,061,885
BASE TAXABLE VALUE		0
TOTAL JUST VALUE		9,115,669
NCON VALUE		0
INCOME VALUE		
PREVIOUS YEAR MKT VALUE		8,798,268

PERMIT NUM	DESCRIPTION	AMT	ISSUED

SALES DATA

OFF RECORD Number	DATE	TYPE INST	Q U	V I	RSN CD	SALE PRICE

BUILDING NOTES

BUILDING DIMENSIONS

BAS=[YR=2010] W32 CAN=[YR=2010] N13 W14 S13 E4 S4 E7 N4 E3$ W3 S4 W7 N4 W36 S124 PTO=[YR=2010] W5 S12 E5 N12$ CAN=[YR=2010] S12 E3 N12 W3$ E3 S12 W3 S8 PTO=[YR=2010] W5 S7 E5 N7$ S108 E22 CAN=[YR=2010] S19 E15 N19 W15$ E56 N115 CAN=[YR=2010] E13 N2 E24 N26 E3 N10 W3 N52 W24 N2 W12 S14 E12 N2 E14 S68 W14 N2 W13 S1 W3 S12 E3 S1$ N1 W3 N12 E3 N69 CAN=[YR=2010] N7 W3 S7 E3$ W3 N7 E3 N48$.

EXTRA FEATURES

LN	OB/XF CODE	DESCRIPTION	BLD	CAP	L	W	UNITS	UT	Adj R	ADJ UNIT PRICE	ORIG COND	YEAR ON	YEAR ACTUAL	Q	% COND	OB/XF MKT VALUE	NOTES
41	0812	CONCRETE C	0	0	0	0	4,022.00	SF	4.00	4.00	100	2005	2005	3	83	13,353	
42	0400	CONC CURB	0	0	0	0	2,157.00	LF	15.00	15.00	100	2000	2000	3	81	26,208	
43	0465	FNC GT 15'	0	0	0	0	4.00	UT	450.00	450.00	100	2005	2005	3	61	1,098	
44	0972	ST LGHT UN	0	0	0	0	1.00	UT	2,530.00	2,530.00	100	2000	2000	3	45	1,139	
45	0810	CONCRETE A	0	0	0	0	462.00	SF	6.50	6.50	100	2000	2000	3	75	2,252	
46	0463	FENCE GATE	0	0	0	0	4.00	UT	300.00	300.00	100	2000	2000	3	45	540	
47	0810	CONCRETE A	0	0	0	0	336.00	SF	6.50	6.50	100	2013	2013	3	92	2,009	
48	0971	ST LGHT OV	0	0	0	0	1.00	UT	1,555.00	1,555.00	100	1990	1990	3	26	404	
49	0812	CONCRETE C	0	0	79	30	2,370.00	SF	4.00	4.00	100	2008	2008	3	87	8,248	
50	0418	EXHST FAN	0	0	0	0	4.00	UT	400.00	400.00	100	2010	2010	3	35	560	

TOTAL OB/XF 55,811

LAND DESCRIPTION

LN	USE CODE	CLS	LAND USE DESCRIPTION	CAP	RD	LOC ZONE	FRONT	DEPTH	TOT LND UTS	UNIT TYPE	DT	DPTH FACT	% COND	TOT ADJ	UNIT PRICE	ADJ UNIT PRICE	LAND VALUE	OTHER ADJUSTMENTS AND NOTES	YEAR	DENSITY	DECL	FRZ	YR	CONSRV

REVIEW DATE 01/06/2023 BY HSA Total Acres: 12.91 Total Land Value: 2,582,000 Market: 0 Agricultural: 0 Common: 2,582,000 PRINTED 07/09/2026 BY SYS

IN OR 34 PG 437
LESS R/W IN OR 68 PG 125
EMMA LOVE HARDEE

NASSAU COUNTY SCHOOL BOARD/
(EMMA LOVE HARDEE ELEMENTARY), 1201 ATLANTIC AVENUE
FERNANDINA BEACH, FL 32034

2026

29-3N-28-0000-0004-0010

NASSAU COUNTY PROPERTY

BUILDING CHARACTERISTICS

ELEMENT	CD	CONSTRUCTION

DOR CODE	8300	PUBLIC SCHOOLS	
MAP NUM		MKT AREA	01
NEIGHBORHOOD/LOC	1010.00		

AREA TYPE	TOTAL GROSS AREA	PCT OF BASE	YEAR	TOT ADJ AREA	SUBAREA MARKET VALUE
TOTALS					

MARKET ADJUSTMENTS

TYPE	MDL	EFF. AREA	TOT ADJ PTS	EFF. BASE RATE	REPL. COST NEW	AYB	EYB	ECON	FNCT		NORM	% COND

BLD DATE	06/20/2016	KK	LGL DATE
XF DATE			LAND DATE 06/21/2024 TD
INC DATE			AG DATE

VALUATION SUMMARY

VALUATION BY		STANDARD
Tax Group: 2	Tax Dist:	
BUILDING MARKET VALUE		6,290,867
TOTAL MARKET OB/XF VALUE		242,802
TOTAL LAND VALUE - MARKET		2,582,000
TOTAL MARKET VALUE		9,115,669
SOH/AGL Deduction		2,053,784
ASSESSED VALUE		7,061,885
TOTAL EXEMPTION VALUE	01	7,061,885
BASE TAXABLE VALUE		0
TOTAL JUST VALUE		9,115,669
NCON VALUE		0
INCOME VALUE		
PREVIOUS YEAR MKT VALUE		8,798,268

PERMIT NUM	DESCRIPTION	AMT	ISSUED

SALES DATA

OFF RECORD Number	DATE	TYPE INST	Q U /	V I /	RSN CD	SALE PRICE

BUILDING NOTES

BUILDING DIMENSIONS

EXTRA FEATURES

LN	OB/XF CODE	DESCRIPTION	BLD	CAP	L	W	UNITS	UT	Adj R	ADJ UNIT PRICE	ORIG COND	YEAR ON	YEAR ACTUAL	Q	% COND	OB/XF MKT VALUE	NOTES
51	0978	SECURTY LT	0	0	0	0	21.00	UT	450.00	450.00	100	2010	2010	3	74	6,993	
52	0511	GARAGE CB-	0	0	24	16	384.00	SF	40.00	40.00	100	1990	1990	3	54.5	8,371	
53	0351	CARPORT MT	0	0	38	7	266.00	SF	10.00	10.00	100	1990	1990	3	20	532	
54	0351	CARPORT MT	0	0	14	8	112.00	SF	10.00	10.00	100	1990	1990	3	20	224	

TOTAL OB/XF 16,120

LAND DESCRIPTION

LN	USE CODE	CLS	LAND USE DESCRIPTION	CAP	RD	LOC ZONE	FRONT	DEPTH	TOT LND UTS	UNIT TYPE	DT	DPTH FACT	% COND	TOT ADJ	UNIT PRICE	ADJ UNIT PRICE	LAND VALUE	OTHER ADJUSTMENTS AND NOTES	YEAR	DENSITY	DECL	FRZ	YR	CONSRV

REVIEW DATE 01/06/2023 BY HSA Total Acres: 12.91 Total Land Value: 2,582,000 Market: 0 Agricultural: 0 Common: 2,582,000 PRINTED 07/09/2026 BY SYS