LOT 98
CONCOURSE CROSSING PHASE 2
OR 2583/198

VARNEY SAVANNA & NICHOLAS
95093 ROCKY PL
FERNANDINA BEACH, FL 32034

2026

29-2N-28-0330-0098-0000

NASSAU COUNTY PROPERTY

BUILDING CHARACTERISTICS

ELEMENT	CD	CONSTRUCTION
Exterior Wall	31	HARDIE BRD 100
Roof Structur	03	GABLE/HIP 100
Roof Cover	03	COMP SHNGL 100
Interior Wall	05	DRYWALL 100
Interior Floo	13	LVT/LAMNT 50
Interior Floo	14	CARPET 50
Air Condition	03	CENTRAL 100
Heating Type	04	AIR DUCTED 100
Bedrooms		4 100
Bathrooms		3.5 100
Frame	02	WOOD FRAME 100
Stories	2.	2. 100
Units		0 100
Quality	03	Quality Level 03
DOR CODE	0100	SINGLE FAMILY
MAP NUM		MKT AREA 04
NEIGHBORHOOD/LOC	4095.00	

AREA TYPE	TOTAL GROSS AREA	PCT OF BASE	YEAR	TOT ADJ AREA	SUBAREA MARKET VALUE
BAS	1,335	100	2025	1,335	141,857
FGR	540	55	2025	297	31,559
FOP	120	30	2025	36	3,825
FOP	171	30	2025	51	5,419
FUS	1,685	100	2025	1,685	179,048
STR	70	10	2025	7	744
TOTALS	3,921			3,411	362,453

MARKET ADJUSTMENTS

TYPE	MDL	EFF. AREA	TOT ADJ PTS	EFF. BASE RATE	REPL. COST NEW	AYB	EYB	ECON	FNCT		NORM	% COND
0100	01	3,411	101.2000	106.26	362,453	2024	2024	0	0	0	0.00	100.00

1 SINGLE FAM 0% - 2025 Heated Area: 3020 HX Base Yr

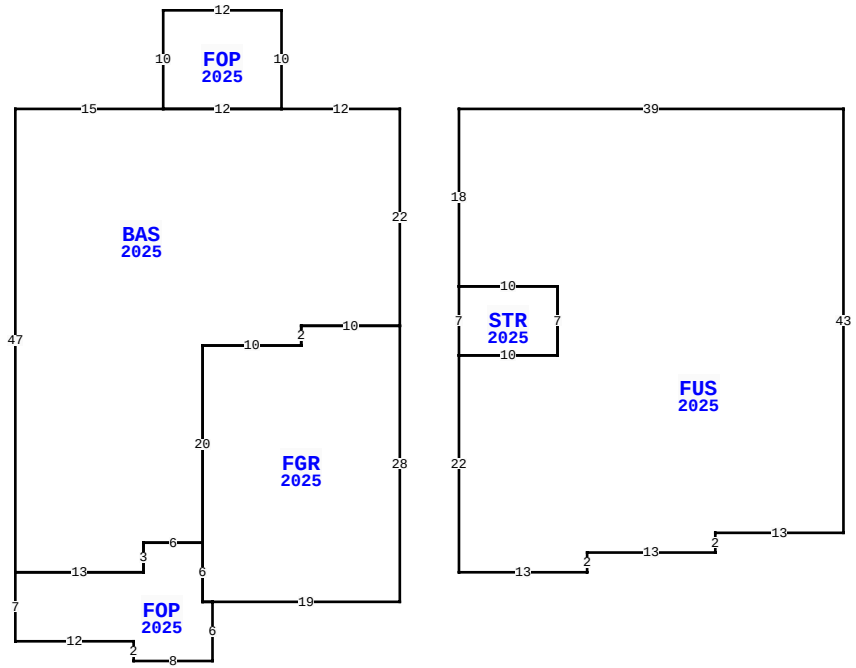

95093 ROCKY PL, FERNANDINA BEACH

BLD DATE		LGL DATE	
XF DATE		LAND DATE	04/23/2025 MLU
INC DATE		AG DATE	

VALUATION SUMMARY

VALUATION BY	STANDARD
Tax Group: 4	Tax Dist:
BUILDING MARKET VALUE	362,453
TOTAL MARKET OB/XF VALUE	0
TOTAL LAND VALUE - MARKET	85,000
TOTAL MARKET VALUE	447,453
SOH/AGL Deduction	0
ASSESSED VALUE	447,453
TOTAL EXEMPTION VALUE	0
BASE TAXABLE VALUE	447,453
TOTAL JUST VALUE	447,453
NCON VALUE	0
INCOME VALUE	
PREVIOUS YEAR MKT VALUE	453,310

PERMIT NUM	DESCRIPTION	AMT	ISSUED
CO240005264	PRIVATE PROVIDER	542,075	05/01/2024
B230012695	SFR H3013 G 522	54,075	10/03/2023

SALES DATA

OFF RECORD Number	DATE	TYPE INST	Q / U	V / I	RSN CD	SALE PRICE
2709/493	4/30/2024	WD	Q	I	01	500,000

GRANTOR: CENTURY COMMUNITIES O

GRANTEE: VARNEY SAVANNA & NI

BUILDING NOTES

BUILDING DIMENSIONS

BAS=[YR=2025;ORIG=10,10] E15 E12 E12 S22 W10 S2 W10 S20 W6 S3 W13 N47 $
FOP=[YR=2025;ORIG=25,10] E12 N10 W12 S10 $
FGR=[YR=2025;ORIG=29,34] E10 N2 E10 S28 W19 W1 N6 N20 $
FOP=[YR=2025;ORIG=29,54] W6 S3 W13 S7 E12 S2 E8 N6 W1 N6 $
FUS=[YR=2025;ORIG=55,10] E39 S43 W13 S2 W13 S2 W13 N22 E10 N7 W10 N18 $
STR=[YR=2025;ORIG=55,28] E10 S7 W10 N7 $
.

EXTRA FEATURES

L N	OB/XF CODE	DESCRIPTION	BLD	CAP	L	W	UNITS	UT	Adj R	ADJ UNIT PRICE	ORIG COND	YEAR ON	YEAR ACTUAL	Q	% COND	OB/XF MKT VALUE	NOTES

LAND DESCRIPTION

TOTAL OB/XF 0

L N	USE CODE	CLS	LAND USE DESCRIPTION	CAP	R D	LOC ZONE	FRONT	DEPTH	TOT LND UTS	UNIT TYPE	D T	DPTH FACT	% COND	TOT ADJ	UNIT PRICE	ADJ UNIT PRICE	LAND VALUE	OTHER ADJUSTMENTS AND NOTES	YEAR	DENSITY	DECL	FRZ	YR	CONSRV
1	000134	C	RES POND	0		PUD	0.00	0.00	1.00	LT		1.00	1.00	1.00	85,000.00	85,000.00	85,000							

REVIEW DATE 07/02/2024 BY TW Total Acres: 0.00 Total Land Value: 85,000 Market: 0 Agricultural: 0 Common: 85,000 PRINTED 07/09/2026 BY SYS