LOT 92
CONCOURSE CROSSING PHASE 2
OR 2583/198

EVES HEATHER/HOOVER JARED GREGORY
95045 ROCKY PLACE
FERNANDINA BEACH, FL 32034

2026

29-2N-28-0330-0092-0000

BUILDING CHARACTERISTICS

ELEMENT	CD	CONSTRUCTION
Exterior Wall	31	HARDIE BRD 100
Roof Structur	03	GABLE/HIP 100
Roof Cover	03	COMP SHNGL 100
Interior Wall	05	DRYWALL 100
Interior Floo	13	LVT/LAMNT 50
Interior Floo	14	CARPET 50
Air Condition	03	CENTRAL 100
Heating Type	04	AIR DUCTED 100
Bedrooms		4 100
Bathrooms		3.5 100
Frame	02	WOOD FRAME 100
Stories	2.	2. 100
Units		0 100
Quality	03	Quality Level 03
DOR CODE	0100	SINGLE FAMILY
MAP NUM		MKT AREA 04
NEIGHBORHOOD/LOC	4095.00	

AREA TYPE	TOTAL GROSS AREA	PCT OF BASE	YEAR	TOT ADJ AREA	SUBAREA MARKET VALUE
BAS	1,335	100	2025	1,335	141,857
FGR	540	55	2025	297	31,559
FOP	120	30	2025	36	3,825
FOP	143	30	2025	43	4,569
FUS	1,707	100	2025	1,707	181,386
STR	70	10	2025	7	744
TOTALS	3,915			3,425	363,940

MARKET ADJUSTMENTS

TYPE	MDL	EFF. AREA	TOT ADJ PTS	EFF. BASE RATE	REPL. COST NEW	AYB	EYB	ECON	FNCT		NORM	% COND
0100	01	3,425	101.2000	106.26	363,940	2024	2024	0	0	0	0.00	100.00

1 SINGLE FAM 100% - 2026 Heated Area: 3042 HX Base Yr 2026

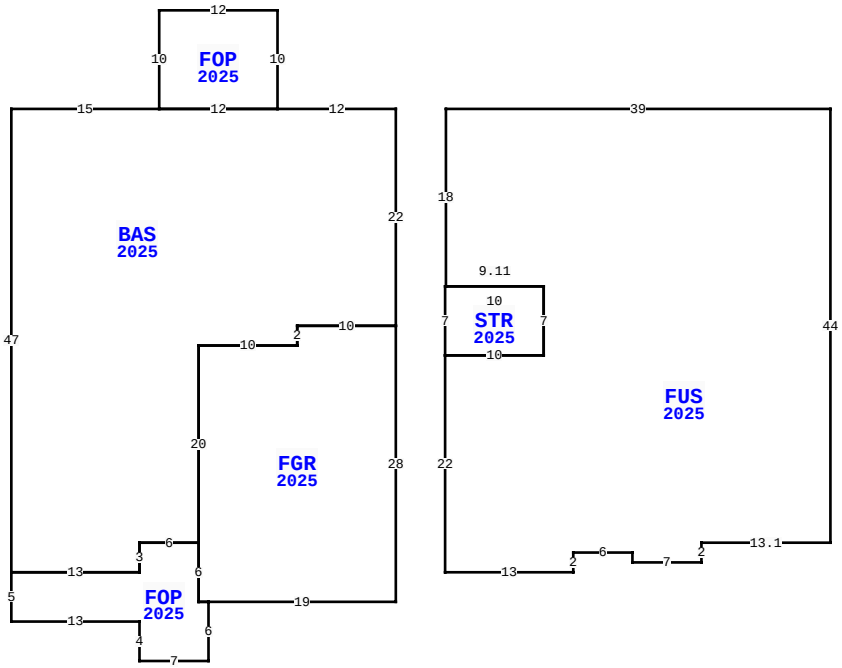

95045 ROCKY PL, FERNANDINA BEACH

BLD DATE		LGL DATE	
XF DATE		LAND DATE	04/23/2025 MLU
INC DATE		AG DATE	

NASSAU COUNTY PROPERTY

PAGE 1 of 1 4

VALUATION SUMMARY

VALUATION BY		STANDARD
Tax Group: 4	Tax Dist:	
BUILDING MARKET VALUE		363,940
TOTAL MARKET OB/XF VALUE		0
TOTAL LAND VALUE - MARKET		85,000
TOTAL MARKET VALUE		448,940
SOH/AGL Deduction		0
ASSESSED VALUE		448,940
TOTAL EXEMPTION VALUE	HX HB	51,411
BASE TAXABLE VALUE		397,529
TOTAL JUST VALUE		448,940
NCON VALUE		0
INCOME VALUE		
PREVIOUS YEAR MKT VALUE		453,737

PERMIT NUM	DESCRIPTION	AMT	ISSUED
CO240006166	PRIVATE PROVIDER	547,538	05/22/2024
B230012724	SFR H3039 G522	547,538	10/03/2023

SALES DATA

OFF RECORD Number	DATE	TYPE INST	Q / U	V / I	RSN CD	SALE PRICE
2720/868	6/19/2024	WD	Q	I	01	479,000

GRANTOR: CENTURY COMMUNITIES O

GRANTEE: EVES HEATHER

BUILDING NOTES

BUILDING DIMENSIONS

BAS=[YR=2025;ORIG=10,10] E15 E12 E12 S22 W10 S2 W10 S20 W6 S3 W13 N47 $
FOP=[YR=2025;ORIG=25,10] E12 N10 W12 S10 $
FGR=[YR=2025;ORIG=29,34] E10 N2 E10 S28 W19 W1 N6 N20 $
FOP=[YR=2025;ORIG=29,54] W6 S3 W13 S5 E13 S4 E7 N6 W1 N6 $
FUS=[YR=2025;ORIG=54.1,10] E39 S44 W13.1 S2 W7 N1 W6 S2 W13 N22 E10 N7 W9.11 N18 $
STR=[YR=2025;ORIG=54,28] E10 S7 W10 N7 $
.

EXTRA FEATURES

L N	OB/XF CODE	DESCRIPTION	BLD	CAP	L	W	UNITS	UT	Adj R	ADJ UNIT PRICE	ORIG COND	YEAR ON	YEAR ACTUAL	Q	% COND	OB/XF MKT VALUE	NOTES

LAND DESCRIPTION

TOTAL OB/XF 0

L N	USE CODE	CLS	LAND USE DESCRIPTION	CAP	R D	LOC ZONE	FRONT	DEPTH	TOT LND UTS	UNIT TYPE	D T	DPTH FACT	% COND	TOT ADJ	UNIT PRICE	ADJ UNIT PRICE	LAND VALUE	OTHER ADJUSTMENTS AND NOTES	YEAR	DENSITY	DECL	FRZ	YR	CONSRV
1	000135	C	RES NATURAL	100		PUD	0.00	0.00	1.00	LT		1.00	1.00	1.00	85,000.00	85,000.00	85,000							

REVIEW DATE 07/02/2024 BY TW Total Acres: 0.00 Total Land Value: 85,000 Market: 0 Agricultural: 0 Common: 85,000 PRINTED 07/09/2026 BY SYS