UNIT 1 LOT A
CONCOURSE CROSSING PHASE 1 R/P
OR 2590/692

ASSURIAN SARGON J L/E/
95449 KATHERINE ST
FERNANDINA BEACH, FL 32034

2026

29-2N-28-0330-0001-00A0

NASSAU COUNTY PROPERTY

BUILDING CHARACTERISTICS

ELEMENT	CD	CONSTRUCTION
Exterior Wall	31	HARDIE BRD 100
Roof Structur	03	GABLE/HIP 100
Roof Cover	03	COMP SHNGL 100
Roof Cover	12	MODULAR MT 0
Interior Wall	05	DRYWALL 100
Interior Floo	13	LVT/LAMNT 50
Interior Floo	14	CARPET 50
Air Condition	03	CENTRAL 100
Heating Type	04	AIR DUCTED 100
Bedrooms		3 100
Bathrooms		2.5 100
Frame	02	WOOD FRAME 100
Stories	2.	2. 100
Units		0 100
Quality	03	Quality Level 03
DOR CODE	0100	SINGLE FAMILY
MAP NUM		MKT AREA 04
NEIGHBORHOOD/LOC	4095.00	

AREA TYPE	TOTAL GROSS AREA	PCT OF BASE	YEAR	TOT ADJ AREA	SUBAREA MARKET VALUE
BAS	752	100	2024	752	85,464
FGR	285	55	2024	157	17,843
FOP	25	30	2024	8	909
FOP	144	30	2024	43	4,886
FUS	1,072	100	2024	1,072	121,832
STR	52	10	2024	5	568
TOTALS	2,330			2,037	231,503

MARKET ADJUSTMENTS

TYPE	MDL	EFF. AREA	TOT ADJ PTS	EFF. BASE RATE	REPL. COST NEW	AYB	EYB	ECON	FNCT		NORM	% COND
0320	01	2,037	108.7800	114.22	232,666	2023	2023	0	0	0	0.50	99.50

1 TOWNHOUSE 0% - 2024 Heated Area: 1824 HX Base Yr

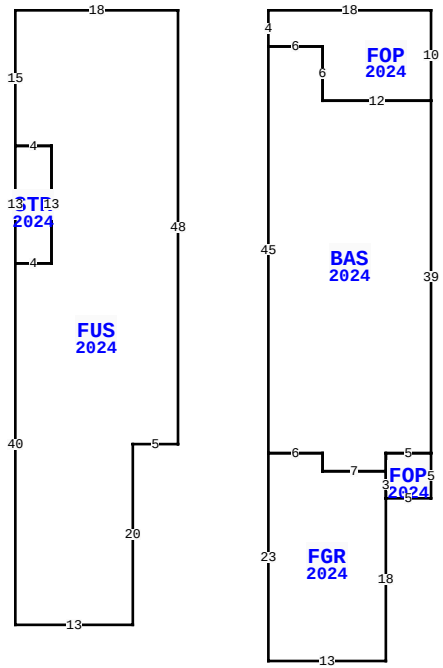

95449 KATHERINE ST, FERNANDINA BEACH

BLD DATE		LGL DATE	
XF DATE		LAND DATE	04/23/2025 MLU
INC DATE		AG DATE	

VALUATION SUMMARY

VALUATION BY	STANDARD
Tax Group: 4	Tax Dist:
BUILDING MARKET VALUE	231,503
TOTAL MARKET OB/XF VALUE	0
TOTAL LAND VALUE - MARKET	42,500
TOTAL MARKET VALUE	274,003
SOH/AGL Deduction	0
ASSESSED VALUE	274,003
TOTAL EXEMPTION VALUE	0
BASE TAXABLE VALUE	274,003
TOTAL JUST VALUE	274,003
NCON VALUE	0
INCOME VALUE	
PREVIOUS YEAR MKT VALUE	266,562

PERMIT NUM	DESCRIPTION	AMT	ISSUED
22018879	NEW CONSTR	324,802	12/29/2022
220004831		324,802	

SALES DATA

OFF RECORD Number	DATE	TYPE INST	Q U	V I	RSN CD	SALE PRICE
2845/1502	2/12/2026	QC	U	I	11	100
GRANTOR: ASSURIAN SARGON J L/E						
GRANTEE: ASSURIAN JONATHAN						
2688/434	12/28/2023	WD	Q	I	01	321,300
GRANTOR: CENTURY COMMUNITIES O						
GRANTEE: ASSURIAN SARGON J &						

BUILDING NOTES

BUILDING DIMENSIONS

FUS=[YR=2024;ORIG=70,6] W18 S15 E4 S13 W4 S40 E13 N20 E5 N48 $
BAS=[YR=2024;ORIG=80,10] E6 S6 E12 S39 W5 S2 W7 N2 W6 N45 $
FGR=[YR=2024;ORIG=93,57] W7 N2 W6 S23 E13 N18 N3 $
FOP=[YR=2024;ORIG=80,6] E18 S10 W12 N6 W6 N4 $
STR=[YR=2024;ORIG=52,21] E4 S13 W4 N13 $
FOP=[YR=2024;ORIG=98,55] W5 S2 S3 E5 N5 $
.

EXTRA FEATURES

LN	OB/XF CODE	DESCRIPTION	BLD	CAP	L	W	UNITS	UT	Adj R	ADJ UNIT PRICE	ORIG COND	YEAR ON	YEAR ACTUAL	Q	% COND	OB/XF MKT VALUE	NOTES

LAND DESCRIPTION

TOTAL OB/XF 0

LN	USE CODE	CLS	LAND USE DESCRIPTION	CAP	RD	LOC ZONE	FRONT	DEPTH	TOT LND UTS	UNIT TYPE	DT	DPTH FACT	% COND	TOT ADJ	UNIT PRICE	ADJ UNIT PRICE	LAND VALUE	OTHER ADJUSTMENTS AND NOTES	YEAR	DENSITY	DECL	FRZ	YR	CONSRV
1	000310	C	TOWNHOUSE	0		PUD	0.00	0.00	1.00	LT		1.00	1.00	1.00	42,500.00	42,500.00	42,500							

REVIEW DATE 01/10/2024 BY DJ Total Acres: 0.00 Total Land Value: 42,500 Market: 0 Agricultural: 0 Common: 42,500 PRINTED 07/09/2026 BY SYS