LOT 50
SANDY POINTE PRESERVE PHASE 2
OR 2401/128

MANSFIELD DANIEL & SARAH
95224 SANDY POINTE DRIVE
FERNANDINA BEACH, FL 32034

2026

29-2N-28-0117-0050-0000

BUILDING CHARACTERISTICS

ELEMENT	CD	CONSTRUCTION
Exterior Wall	31	HARDIE BRD 100
Roof Structur	08	IRREGULAR 100
Roof Cover	03	COMP SHNGL 100
Interior Wall	05	DRYWALL 100
Interior Floo	13	LVT/LAMNT 100
Air Condition	03	CENTRAL 100
Heating Type	04	AIR DUCTED 100
Bedrooms		4 100
Bathrooms		3 100
Frame	02	WOOD FRAME 100
Stories	1.	1. 100
Units		0 100
Occupancy	00	NONE 100
Quality	02	Quality Level 02

DOR CODE 0100 SINGLE FAMILY
MAP NUM | MKT AREA 04
NEIGHBORHOOD/LOC 4087.00

AREA TYPE	TOTAL GROSS AREA	PCT OF BASE	YEAR	TOT ADJ AREA	SUBAREA MARKET VALUE
BAS	2,488	100	2022	2,488	345,477
FGR	725	55	2022	399	55,404
FOP	71	30	2022	21	2,916
FOP	220	30	2022	66	9,164
FST	15	55	2022	8	1,111
TOTALS	3,519			2,982	414,072

MARKET ADJUSTMENTS

TYPE	MDL	EFF. AREA	TOT ADJ PTS	EFF. BASE RATE	REPL. COST NEW	AYB	EYB	ECON	FNCT		NORM	% COND
0900	01	2,982	100.9090	140.26	418,255	2022	2022	0	0	0	1.00	99.00

1 SNGL FAM 100% - 2024 Heated Area: 2488 HX Base Yr 2024

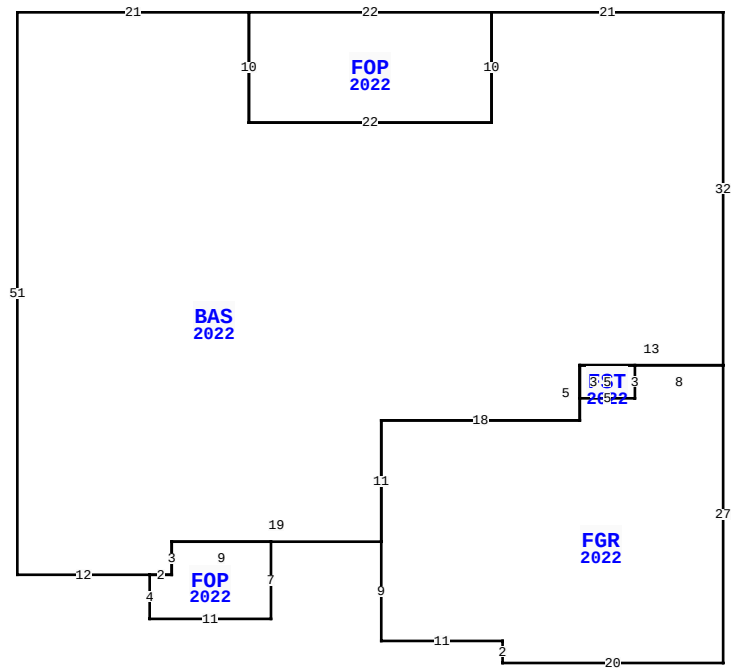

95224 SANDY POINTE DR, FERNANDINA BEACH

BLD DATE		LGL DATE	
XF DATE		LAND DATE	05/06/2025 MLU
INC DATE		AG DATE	

NASSAU COUNTY PROPERTY

PAGE 1 of 1 4

VALUATION SUMMARY

VALUATION BY		STANDARD
Tax Group: 4	Tax Dist:	
BUILDING MARKET VALUE		414,072
TOTAL MARKET OB/XF VALUE		0
TOTAL LAND VALUE - MARKET		125,000
TOTAL MARKET VALUE		539,072
SOH/AGL Deduction		52,604
ASSESSED VALUE		486,468
TOTAL EXEMPTION VALUE	HX HB	51,411
BASE TAXABLE VALUE		435,057
TOTAL JUST VALUE		539,072
NCON VALUE		0
INCOME VALUE		
PREVIOUS YEAR MKT VALUE		529,304

PERMIT NUM	DESCRIPTION	AMT	ISSUED
22018628	CO ISSUED	0	12/20/2022
B2206164	NEW CONSTR	421,488	04/20/2022

SALES DATA

OFF RECORD Number	DATE	TYPE INST	Q / U	V / I	RSN CD	SALE PRICE
2612/1054	1/06/2023	WD	Q	I	02	627,500

GRANTOR: SEDA CONSTRUCTION COM
GRANTEE: MANSFIELD DANIEL &

BUILDING NOTES

BUILDING DIMENSIONS

BAS=[YR=2022] W21 FOP=[YR=2022] W22 S10 E22 N10$ S10 W22 N10 W21 S51 E12 FOP=[YR=2022] S4 E11 N7 W9 S3 W2 $ E2 N3 E19 FGR=[YR=2022] S9 E11 S2 E20 N27 W8 FST=[YR=2022] S3 W5 N3 E5 $ W5 S5 W18 S11$ N11 E18 N5 E13 N32$.

EXTRA FEATURES

L N	OB/XF CODE	DESCRIPTION	BLD	CAP	L	W	UNITS	UT	Adj R	ADJ UNIT PRICE	ORIG COND	YEAR ON	YEAR ACTUAL	Q	% COND	OB/XF MKT VALUE	NOTES

LAND DESCRIPTION

TOTAL OB/XF 0

L N	USE CODE	CLS	LAND USE DESCRIPTION	CAP	R D	LOC ZONE	FRONT	DEPTH	TOT LND UTS	UNIT TYPE	D T	DPTH FACT	% COND	TOT ADJ	UNIT PRICE	ADJ UNIT PRICE	LAND VALUE	OTHER ADJUSTMENTS AND NOTES	YEAR	DENSITY	DECL	FRZ	YR	CONSRV
1	000100	C	RES	100		PUD	0.00	0.00	1.00	LT		1.00	1.00	1.00	125,000.00	125,000.00	125,000							

REVIEW DATE 01/01/2023 BY CD Total Acres: 0.00 Total Land Value: 125,000 Market: 0 Agricultural: 0 Common: 125,000 PRINTED 07/09/2026 BY SYS