BLOCK 10 PT LOTS 5,6,7 & 8
IN OR 2782/869
J M DANCY SURVEY UNR

BENNETT ANNETTE R
9616 SHELLIE RD
JACKSONVILLE, FL 32257

**2026**

**29-2N-25-3120-0057-0000**

## BUILDING CHARACTERISTICS

| ELEMENT | CD | CONSTRUCTION |
|---|---|---|
| Exterior Wall | 31 | HARDIE BRD 100 |
| Roof Structur | 03 | GABLE/HIP 100 |
| Roof Cover | 03 | COMP SHNGL 100 |
| Interior Wall | 05 | DRYWALL 100 |
| Interior Floo | 09 | PINE WOOD 100 |
| Air Condition | 03 | CENTRAL 100 |
| Heating Type | 04 | AIR DUCTED 100 |
| Bedrooms | | 3 100 |
| Bathrooms | | 2 100 |
| Frame | 02 | WOOD FRAME 100 |
| Stories | 2. | 2. 100 |
| Units | | 0 100 |
| BUD8 Adjustme | 01 | DIST CA 100 |
| Occupancy | 00 | NONE 100 |
| Quality | 03 | Quality Level 03 |

DOR CODE 0100 SINGLE FAMILY
MAP NUM | MKT AREA 07
NEIGHBORHOOD/LOC 1290.100

| AREA TYPE | TOTAL GROSS AREA | PCT OF BASE | YEAR | TOT ADJ AREA | SUBAREA MARKET VALUE |
|---|---|---|---|---|---|
| BAS | 798 | 100 | 1993 | 798 | 46,144 |
| BAS | 84 | 100 | 2025 | 84 | 4,857 |
| FOP | 310 | 30 | 2025 | 93 | 5,378 |
| FUS | 798 | 100 | 1993 | 798 | 46,144 |
| UOP | 84 | 20 | 2025 | 17 | 983 |
| TOTALS | 2,074 | | | 1,790 | 103,505 |

## MARKET ADJUSTMENTS

| TYPE | MDL | EFF. AREA | TOT ADJ PTS | EFF. BASE RATE | REPL. COST NEW | AYB | EYB | ECON | FNCT | UC | NORM | % COND |
|---|---|---|---|---|---|---|---|---|---|---|---|---|
| 0900 | 01 | 1,790 | 104.0000 | 144.56 | 258,762 | 1900 | 1960 | 0 | 0 | 40 | 23.50 | 40.00 |

1 SNGL FAM 0% - 0 Heated Area: 1680 HX Base Yr

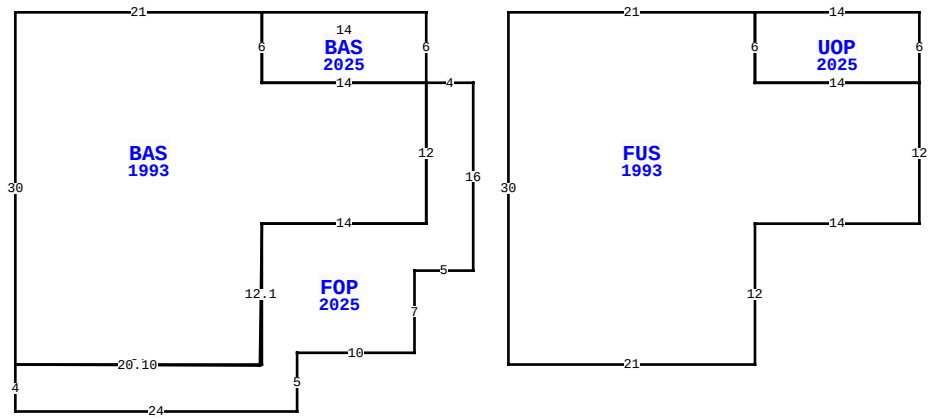


449555 US HWY 301, CALLAHAN

| | | | |
|---|---|---|---|
| BLD DATE | | LGL DATE | |
| XF DATE | | LAND DATE | 05/12/2026 DC |
| INC DATE | | AG DATE | |

## NASSAU COUNTY PROPERTY

PAGE 1 of 1 1

### VALUATION SUMMARY

| | |
|---|---|
| VALUATION BY | STANDARD |
| Tax Group: 1 | Tax Dist: |
| BUILDING MARKET VALUE | 103,505 |
| TOTAL MARKET OB/XF VALUE | 4,889 |
| TOTAL LAND VALUE - MARKET | 94,743 |
| TOTAL MARKET VALUE | 203,137 |
| SOH/AGL Deduction | 0 |
| ASSESSED VALUE | 203,137 |
| TOTAL EXEMPTION VALUE | 0 |
| BASE TAXABLE VALUE | 203,137 |
| TOTAL JUST VALUE | 203,137 |
| NCON VALUE | 0 |
| INCOME VALUE | |
| PREVIOUS YEAR MKT VALUE | 275,690 |

SFR IS UC (DOWN TO STUDS): COMPLETE REMODEL; NEW R

| PERMIT NUM | DESCRIPTION | AMT | ISSUED |
|---|---|---|---|
| 4788 | COMPLETE RENOVATI | | 05/28/2024 |
| 4641-M | MECHANICAL | | 06/06/2023 |
| 4641-E | ELECTRICAL REMODE | | 06/02/2023 |
| 4641-B | REMODEL | | 05/30/2023 |

## SALES DATA

| OFF RECORD Number | DATE | TYPE INST | Q / U | V / I | RSN CD | SALE PRICE |
|---|---|---|---|---|---|---|
| 2782/869 | 3/12/2025 | WD | U | I | 11 | 100 |
| GRANTOR: BENNETT ANNETTE R | | | | | | |
| GRANTEE: BENNETT ANNETTE R | | | | | | |
| 1646/0460 | 8/16/2009 | QC | U | I | 11 | 100 |
| GRANTOR: BENNETT LESLIE D | | | | | | |
| GRANTEE: BENNETT ANNETTE R | | | | | | |

## BUILDING NOTES

## EXTRA FEATURES

| LN | OB/XF CODE | DESCRIPTION | BLD | CAP | L | W | UNITS | UT | Adj R | ADJ UNIT PRICE | ORIG COND | YEAR ON | YEAR ACTUAL | Q | % COND | OB/XF MKT VALUE | NOTES |
|---|---|---|---|---|---|---|---|---|---|---|---|---|---|---|---|---|---|
| 1 | 0940 | SHEDS/PORT | 0 | 0 | 14 | 12 | 168.00 | SF | 30.00 | 30.00 | 100 | 2025 | 2024 | | 97 | 4,889 | |

## BUILDING DIMENSIONS

BAS=[YR=1993;ORIG=-6,0] W21 S30 E21 N12 E14 N12 W14 N6 $
FUS=[YR=1993;ORIG=15,0] E21 S6 E14 S12 W14 S12 W21 N30 $
PTR=[ORIG=0,0] E15 W15 $
FOP=[YR=2025;ORIG=-27,30] D0.1R20.10 U12.1R0.2 E14 N12 E4 S16 W5 S7 W10 S5 W24 N4 $
BAS=[YR=2025;ORIG=-6,6] E14 N6 W14 S6 $
UOP=[YR=2025;ORIG=36,6] E14 N6 W14 S6 $
.

## LAND DESCRIPTION

TOTAL OB/XF 4,889

| LN | USE CODE | CLS | LAND USE DESCRIPTION | CAP | RD | LOC ZONE | FRONT | DEPTH | TOT LND UTS | UNIT TYPE | DT | DPTH FACT | % COND | TOT ADJ | UNIT PRICE | ADJ UNIT PRICE | LAND VALUE | OTHER ADJUSTMENTS AND NOTES | YEAR | DENSITY | DECL | FRZ | YR | CONSRV |
|---|---|---|---|---|---|---|---|---|---|---|---|---|---|---|---|---|---|---|---|---|---|---|---|---|
| 1 | 001000 | C | COMMERCIAL | 0 | | CG - | C 0.00 | 0.00 | 13,068.00 | SF | | 1.00 | 1.00 | 1.00 | 7.25 | 7.25 | 94,743 | | | | | | | |

REVIEW DATE 01/06/2026 BY TW Total Acres: 0.20 Total Land Value: 94,743 Market: 0 Agricultural: 0 Common: 94,743 PRINTED 07/09/2026 BY SYS