BLK 1 PT LOT 5 IN OR 349/445
JEHU BOOTHE SURVEY PBK 1/29

BRADDOCK CAROL E
PO BOX 511
CALLAHAN, FL 32011-0511

2026

29-2N-25-3120-0012-0000

NASSAU COUNTY PROPERTY

BUILDING CHARACTERISTICS

ELEMENT	CD	CONSTRUCTION
Exterior Wall	19	COMMON BRK 60
Exterior Wall	05	AVERAGE 40
Roof Structur	01	FLAT 100
Roof Cover	04	BUILT-UP 100
Interior Wall	05	DRYWALL 80
Interior Wall	04	PLYWOOD 20
Interior Floo	15	HARDTILE 60
Interior Floo	14	CARPET 40
Air Condition	03	CENTRAL 100
Heating Type	04	AIR DUCTED 100
Bedrooms		0 100
Bathrooms		2 100
Frame	02	WOOD FRAME 100
Stories	1.	1. 100
Units		0 100
BUD8 Adjustme	01	DIST CA 100
Occupancy	00	NONE 100
Quality	03	Quality Level 03
DOR CODE	7200	PRIVATE SCHOOLS
MAP NUM		MKT AREA 07
NEIGHBORHOOD/LOC	7001.00	

AREA TYPE	TOTAL GROSS AREA	PCT OF BASE	YEAR	TOT ADJ AREA	SUBAREA MARKET VALUE
BAS	2,801	100	1993	2,801	200,802
FCP	644	25	1993	161	11,542
FOP	48	30	1993	14	1,004
FOP	72	30	1993	22	1,577
FOP	744	30	1993	223	15,987
UOP	80	20	1993	16	1,147
UOP	144	20	1994	29	2,079
UST	72	45	1993	32	2,294
UST	92	45	1993	41	2,939
TOTALS	4,697			3,339	239,371

MARKET ADJUSTMENTS

TYPE	MDL	EFF. AREA	TOT ADJ PTS	EFF. BASE RATE	REPL. COST NEW	AYB	EYB	ECON	FNCT		NORM	% COND
1101	01	3,339	107.6400	159.31	531,936	1957	1957	0	5	0	50.00	45.00

1 RETAILSTOR 0% - 0 Heated Area: 2801 HX Base Yr

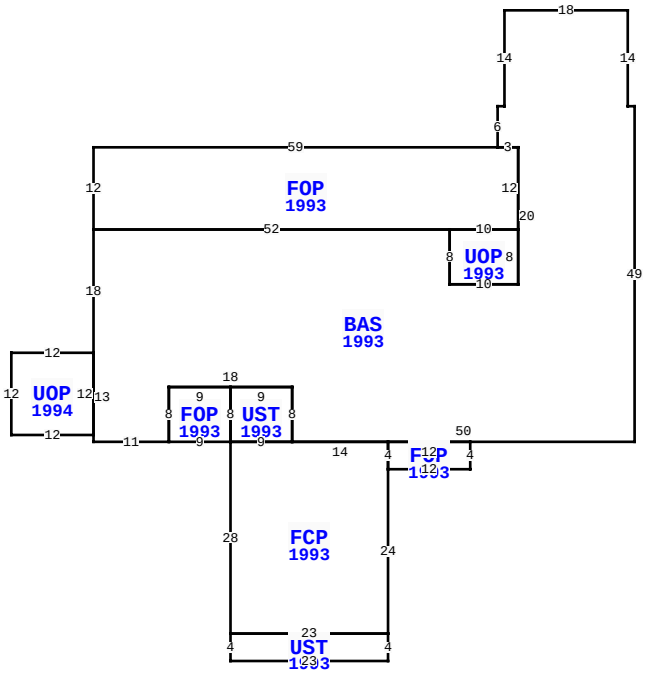

45367 GREEN AVE, CALLAHAN

BLD DATE	12/03/2021	KK	LGL DATE	
XF DATE	12/03/2021	KK	LAND DATE	12/03/2021 KK
INC DATE			AG DATE	

VALUATION SUMMARY

VALUATION BY	STANDARD
Tax Group: 1	Tax Dist:
BUILDING MARKET VALUE	277,526
TOTAL MARKET OB/XF VALUE	46,591
TOTAL LAND VALUE - MARKET	75,896
TOTAL MARKET VALUE	400,013
SOH/AGL Deduction	2,265
ASSESSED VALUE	397,748
TOTAL EXEMPTION VALUE	0
BASE TAXABLE VALUE	397,748
TOTAL JUST VALUE	400,013
NCON VALUE	0
INCOME VALUE	
PREVIOUS YEAR MKT VALUE	364,439

PERMIT NUM	DESCRIPTION	AMT	ISSUED
4417	REPAIR/RRF	0	06/22/2021
4077	REPAIR/RRF	0	10/01/2016

SALES DATA

OFF RECORD Number	DATE	TYPE INST	Q U	V I	RSN CD	SALE PRICE
0349/0445	11/25/1981	WD	Q	I		45,000
GRANTOR: HOLLAND NORMA ELLEN F						
GRANTEE: BRADDOCK DALE P & C						
0111/0505	5/13/1971	QC	Q	I	06	100
GRANTOR: PALFALVY ERNEST (S)						
GRANTEE: PALFALVY NORMA ELLE						

BUILDING NOTES

BUILDING DIMENSIONS

BAS=[YR=1993] W1 N14 W18 S14 W1 S6 FOP=[YR=1993] W59 S12 E52 UOP=[YR=1993] S8 E10 N8 W10$ E10 N12 W3$ E3 S20 W10 N8 W52 S18 UOP=[YR=1994] W12 S12 E12 N12$ S13 E11 FOP=[YR=1993] E9 FCP=[YR=1993] S28 UST=[YR=1993] S4 E23 N4 W23$ E23 N24 FOP=[YR=1993] E12 N4 W12 S4$ N4 W14 UST=[YR=1993] N8 W9 S8 E9$ W9$ N8 W9 S8$ N8 E18 S8 E50 N49$.

EXTRA FEATURES

LN	OB/XF CODE	DESCRIPTION	BLD	CAP	L	W	UNITS	UT	Adj R	ADJ UNIT PRICE	ORIG COND	YEAR ON	YEAR ACTUAL	Q	% COND	OB/XF MKT VALUE	NOTES
1	0865	POOL SF	0	0	0	0	588.00	SF	80.00	80.00	100	1970	1970		65	30,576	
2	0812	CONCRETE C	0	0	0	0	3,450.00	SF	4.00	4.00	100	1975	1975	3	24	3,312	
3	0940	SHEDS/PORT	0	0	10	20	200.00	SF	19.50	19.50	100	1994	1994	3	20	780	
4	1242	WD DECK A	0	0	0	0	188.00	SF	10.00	10.00	100	1992	1992	3	20	376	
5	1242	WD DECK A	0	0	0	0	370.00	SF	10.00	10.00	100	2004	2004	3	20	740	
6	1127	BRICK 8"	0	0	23	9	207.00	SF	11.00	11.00	100	1985	1985	3	79	1,799	
7	0422	CL FNC 4'	0	0	0	0	126.00	LF	15.00	15.00	100	2004	2004	3	58	1,096	
8	0463	FENCE GATE	0	0	0	0	1.00	UT	300.00	300.00	100	2004	2004	3	58	174	
9	0443	STK FNC 6'	0	0	0	0	414.00	LF	10.00	10.00	100	2004	2004	3	20	828	
10	0463	FENCE GATE	0	0	0	0	4.00	UT	300.00	300.00	100	2004	2004	3	58	696	

TOTAL OB/XF 40,377

LAND DESCRIPTION

LN	USE CODE	CLS	LAND USE DESCRIPTION	CAP	RD	LOC ZONE	FRONT	DEPTH	TOT LND UTS	UNIT TYPE	DT	DPTH FACT	% COND	TOT ADJ	UNIT PRICE	ADJ UNIT PRICE	LAND VALUE	OTHER ADJUSTMENTS AND NOTES	YEAR	DENSITY	DECL	FRZ	YR	CONSRV
1	007200	C	SCHOOL PRI	0	0003	MU	125.00	210.00	25,298.66	SF		1.00	1.00	1.00	3.00	3.00	75,896							

REVIEW DATE 01/01/2023 BY CD Total Acres: 0.00 Total Land Value: 75,896 Market: 0 Agricultural: 0 Common: 75,896 PRINTED 07/09/2026 BY SYS

BLK 1 PT LOT 5 IN OR 349/445
JEHU BOOTHE SURVEY PBK 1/29

BRADDOCK CAROL E
PO BOX 511
CALLAHAN, FL 32011-0511

2026

29-2N-25-3120-0012-0000

NASSAU COUNTY PROPERTY

BUILDING CHARACTERISTICS

ELEMENT	CD	CONSTRUCTION
Exterior Wall	05	AVERAGE 100
Roof Structur	01	FLAT 100
Roof Cover	04	BUILT-UP 100
Interior Wall	05	DRYWALL 100
Interior Floo	10	TERRAZZO 50
Interior Floo	14	CARPET 50
Air Condition	01	NONE 100
Heating Type	02	CONVECTION 100
Bedrooms		1 100
Bathrooms		1 100
Frame	02	WOOD FRAME 100
Stories	2.	2. 100
Units		0 100
BUD8 Adjustme	01	DIST CA 100
Occupancy	00	NONE 100
Quality	01	Quality Level 01
DOR CODE	7200	PRIVATE SCHOOLS
MAP NUM		MKT AREA 07
NEIGHBORHOOD/LOC	7001.00	

AREA TYPE	TOTAL GROSS AREA	PCT OF BASE	YEAR	TOT ADJ AREA	SUBAREA MARKET VALUE
BAS	300	100	1993	300	15,489
FCP	209	25	1993	52	2,685
FOP	35	30	1993	10	516
FOP	45	30	1993	14	723
FUS	300	100	1993	300	15,489
UOP	88	20	1994	18	929
UST	99	45	1993	45	2,323
TOTALS	1,076			739	38,155

MARKET ADJUSTMENTS

TYPE	MDL	EFF. AREA	TOT ADJ PTS	EFF. BASE RATE	REPL. COST NEW	AYB	EYB	ECON	FNCT	AP	NORM	% COND
0100	01	739	88.2000	92.61	68,439	1957	1957	0	0	20	24.25	55.75

2 SINGLE FAM 0% - 0 Heated Area: 600 HX Base Yr

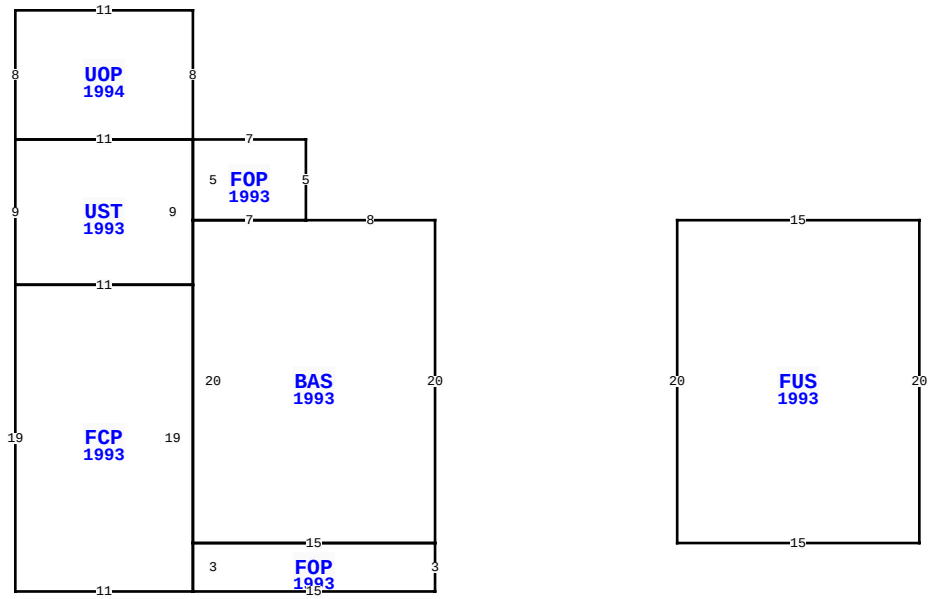

45367 GREEN AVE, CALLAHAN

BLD DATE	12/03/2021	KK	LGL DATE	
XF DATE	12/03/2021	KK	LAND DATE	12/03/2021 KK
INC DATE			AG DATE	

VALUATION SUMMARY

VALUATION BY	STANDARD
Tax Group: 1	Tax Dist:
BUILDING MARKET VALUE	277,526
TOTAL MARKET OB/XF VALUE	46,591
TOTAL LAND VALUE - MARKET	75,896
TOTAL MARKET VALUE	400,013
SOH/AGL Deduction	2,265
ASSESSED VALUE	397,748
TOTAL EXEMPTION VALUE	0
BASE TAXABLE VALUE	397,748
TOTAL JUST VALUE	400,013
NCON VALUE	0
INCOME VALUE	
PREVIOUS YEAR MKT VALUE	364,439

PERMIT NUM	DESCRIPTION	AMT	ISSUED

SALES DATA

OFF RECORD Number	DATE	TYPE INST	Q U /	V I /	RSN CD	SALE PRICE
0349/0445	11/25/1981	WD	Q	I		45,000
GRANTOR: HOLLAND NORMA ELLEN F						
GRANTEE: BRADDOCK DALE P & C						
0111/0505	5/13/1971	QC	Q	I	06	100
GRANTOR: PALFALVY ERNEST (S)						
GRANTEE: PALFALVY NORMA ELLE						

BUILDING NOTES

BUILDING DIMENSIONS

BAS=[YR=1993] W8 FOP=[YR=1993] N5 W7 UOP=[YR=1994] N8 W11 S8 UST=[YR=1993] S9 FCP=[YR=1993] S19 E11 FOP=[YR=1993] E15 N3 W15 S3$ N19 W11$ E11 N9 W11$ E11$ S5 E7$ W7 S20 E15 N20$ PTR=E15 FUS=[YR=1993] E15 S20 W15 N20$W15$.

EXTRA FEATURES

LN	OB/XF CODE	DESCRIPTION	BLD	CAP	L	W	UNITS	UT	Adj R	ADJ UNIT PRICE	ORIG COND	YEAR ON	YEAR ACTUAL	Q	% COND	OB/XF MKT VALUE	NOTES
11	0422	CL FNC 4'	0	0	0	0	60.00	LF	15.00	15.00	100	1990	1990	3	25	225	
12	0940	SHEDS/PORT	0	0	7	7	49.00	SF	18.00	18.00	100	1970	1970	3	20	176	
13	1123	CB 8"	0	0	62	2	124.00	SF	6.15	6.15	100	1970	1970	3	20	153	
14	0810	CONCRETE A	0	0	0	0	897.00	SF	6.50	6.50	100	2004	2004	3	82	4,781	
15	0845	KOOL DECK	0	0	0	0	606.00	SF	7.25	7.25	100	1970	1970	3	20	879	

LAND DESCRIPTION

TOTAL OB/XF 6,214

LN	USE CODE	CLS	LAND USE DESCRIPTION	CAP	RD	LOC ZONE	FRONT	DEPTH	TOT LND UTS	UNIT TYPE	DT	DPTH FACT	% COND	TOT ADJ	UNIT PRICE	ADJ UNIT PRICE	LAND VALUE	OTHER ADJUSTMENTS AND NOTES	YEAR	DENSITY	DECL	FRZ	YR	CONSRV

REVIEW DATE 01/01/2023 BY CD Total Acres: 0.00 Total Land Value: 75,896 Market: 0 Agricultural: 0 Common: 75,896 PRINTED 07/09/2026 BY SYS