4 A IN S1/2 OF SW1/4 OF SW1/4

CHURCH EPHESUS MISSIONARY BAPTIST INC
48143 EPHESUS ROAD
HILLIARD, FL 32046-6417

2026

28-4N-25-0000-0006-0010

BUILDING CHARACTERISTICS

ELEMENT	CD	CONSTRUCTION
Exterior Wall	05	AVERAGE 100
Roof Structur	04	WOOD TRUSS 100
Roof Cover	12	MODULAR MT 100
Interior Wall	04	PLYWOOD 100
Interior Floo	14	CARPET 100
Ceiling	01	FIN.SUSPD 100
Air Condition	03	CENTRAL 100
Heating Type	04	AIR DUCTED 100
Fixtures		8 100
Frame	02	WOOD FRAME 100
Story Height		18 100
RMS		5 100
Stories	0	0 100
Units		0 100
BUD8 Adjustme	04	DIST 01 100
Occupancy	00	NONE 100
Quality	03	Quality Level 03
DOR CODE	7100	CHURCHES
MAP NUM		MKT AREA 05
NEIGHBORHOOD/LOC	5001.00	

AREA TYPE	TOTAL GROSS AREA	PCT OF BASE	YEAR	TOT ADJ AREA	SUBAREA MARKET VALUE
BAS	2,160	100	1993	2,160	259,235
BAS	6,874	100	1993	6,874	824,991
FOP	534	30	1993	160	19,202
FST	60	50	1993	30	3,601
UOP	25	20	1993	5	600
UOP	72	20	1993	14	1,680
UOP	216	20	1993	43	5,161
TOTALS	9,941			9,286	1,114,471

MARKET ADJUSTMENTS

TYPE	MDL	EFF. AREA	TOT ADJ PTS	EFF. BASE RATE	REPL. COST NEW	AYB	EYB	ECON	FNCT		NORM	% COND
7101	04	9,286	95.9310	159.49	1,481,024	1955	1955	0	0	0	24.75	75.25

1 CHURCH 0% - 0 Heated Area: 9034 HX Base Yr

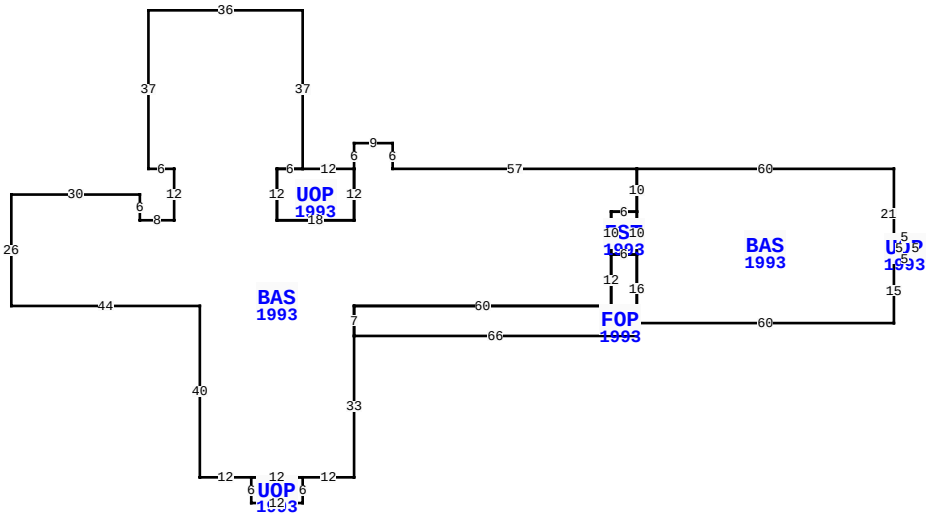

48143 EPHESUS RD, HILLIARD

BLD DATE	02/25/2022	KK	LGL DATE	
XF DATE	02/25/2022	KK	LAND DATE	05/08/2026 MLU
INC DATE			AG DATE	

NASSAU COUNTY PROPERTY

PAGE 1 of 2 4

VALUATION SUMMARY

VALUATION BY		STANDARD
Tax Group: 4	Tax Dist:	
BUILDING MARKET VALUE		1,136,175
TOTAL MARKET OB/XF VALUE		33,402
TOTAL LAND VALUE - MARKET		140,000
TOTAL MARKET VALUE		1,309,577
SOH/AGL Deduction		705,037
ASSESSED VALUE		604,540
TOTAL EXEMPTION VALUE	02	604,540
BASE TAXABLE VALUE		0
TOTAL JUST VALUE		1,309,577
NCON VALUE		0
INCOME VALUE		
PREVIOUS YEAR MKT VALUE		1,225,597

EPHESUS BAPTIST CHURCH

PERMIT NUM	DESCRIPTION	AMT	ISSUED
B230015459	NEW CHURCH BLDG	3,175,558	12/04/2023
B996420	NEW CONSTR	33,600	10/01/1999
2531	H/AC	2,000	04/25/1988
4667	ADDITION	71,280	02/18/1988

SALES DATA

OFF RECORD Number	DATE	TYPE INST	Q U	V I	RSN CD	SALE PRICE

BUILDING NOTES

EXTRA FEATURES

LN	OB/XF CODE	DESCRIPTION	BLD	CAP	L	W	UNITS	UT	Adj R	ADJ UNIT PRICE	ORIG COND	YEAR ON	YEAR ACTUAL	Q	% COND	OB/XF MKT VALUE	NOTES
1	0803	ASPHALT C	0	0	0	0	22,377.00	SF	2.00	2.00	100	1985	1985	3	50	22,377	
2	0812	CONCRETE C	0	0	29	59	1,711.00	SF	4.00	4.00	100	1980	1980	3	29	1,985	
3	0810	CONCRETE A	0	0	60	6	360.00	SF	6.50	6.50	100	1980	1980	3	29	679	
4	0971	ST LGHT OV	0	0	0	0	2.00	UT	1,555.00	1,555.00	100	1985	1985	3	21	653	
5	0801	ASPHALT A	0	0	19	3	57.00	SF	3.00	3.00	100	1985	1985	3	50	86	
6	0940	SHEDS/PORT	0	0	10	10	100.00	SF	30.00	30.00	100	1970	1970	3	20	600	
7	0751	UOP	0	0	10	10	100.00	SF	10.00	10.00	100	2016	2016	3	75	750	
8	0510	GARAGE WD-	0	0	35	16	560.00	SF	35.00	35.00	100	2005	2005	3	32	6,272	

BUILDING DIMENSIONS

BAS=[YR=1993;ORIG=-60,0] W57 N6 W9 S6 S12 W18 N12 E6 N37 W36 S37 E6 S12 W8 N6 W30 S26 E44 S40 E12 E12 E12 N33 N7 E60 N12 N10 E6 N10 $
BAS=[YR=1993;ORIG=0,0] W60 S10 S10 S16 E60 N15 N21 $
FOP=[YR=1993;ORIG=-126,39] E66 N3 N16 W6 S12 W60 S7 $
UOP=[YR=1993;ORIG=-126,0] W12 W6 S12 E18 N12 $
UOP=[YR=1993;ORIG=-150,72] S6 E12 N6 W12 $
FST=[YR=1993;ORIG=-60,20] N10 W6 S10 E6 $
UOP=[YR=1993;ORIG=0,21] E5 N5 W5 S5 $
.

LAND DESCRIPTION

TOTAL OB/XF 33,402

LN	USE CODE	CLS	LAND USE DESCRIPTION	CAP	RD	LOC ZONE	FRONT	DEPTH	TOT LND UTS	UNIT TYPE	DT	DPTH FACT	% COND	TOT ADJ	UNIT PRICE	ADJ UNIT PRICE	LAND VALUE	OTHER ADJUSTMENTS AND NOTES	YEAR	DENSITY	DECL	FRZ	YR	CONSRV
1	007100	C	CHURCH	0		OR	0.00	0.00	4.00	AC		1.00	1.00	1.00	35,000.00	35,000.00	140,000							

REVIEW DATE 12/16/2025 BY TW Total Acres: 4.00 Total Land Value: 140,000 Market: 0 Agricultural: 0 Common: 140,000 PRINTED 07/09/2026 BY SYS

4 A IN S1/2 OF SW1/4 OF SW1/4

CHURCH EPHESUS MISSIONARY BAPTIST INC
48143 EPHESUS ROAD
HILLIARD, FL 32046-6417

2026

28-4N-25-0000-0006-0010

BUILDING CHARACTERISTICS

ELEMENT	CD	CONSTRUCTION
Exterior Wall	05	AVERAGE 100
Roof Structur	04	WOOD TRUSS 100
Roof Cover	03	COMP SHNGL 100
Interior Wall	05	DRYWALL 100
Interior Floo	08	SHT VINYL 100
Air Condition	03	CENTRAL 100
Heating Type	04	AIR DUCTED 100
Fixtures		2 100
Frame	02	WOOD FRAME 100
Story Height		9 100
RMS		4 100
Stories	1.	1. 100
Units		0 100
Occupancy	00	NONE 100
Quality	03	Quality Level 03

DOR CODE	7100	CHURCHES	
MAP NUM		MKT AREA	05
NEIGHBORHOOD/LOC	5001.00		

AREA TYPE	TOTAL GROSS AREA	PCT OF BASE	YEAR	TOT ADJ AREA	SUBAREA MARKET VALUE
BAS	960	100	2016	960	21,704
TOTALS	960			960	21,704

MARKET ADJUSTMENTS

TYPE	MDL	EFF. AREA	TOT ADJ PTS	EFF. BASE RATE	REPL. COST NEW	AYB	EYB	ECON	FNCT		NORM	% COND
1709	04	960	87.8850	75.36	72,346	1994	1994	0	0	0	70.00	30.00

2 MH OFFICE 0% - 0 Heated Area: 960 HX Base Yr

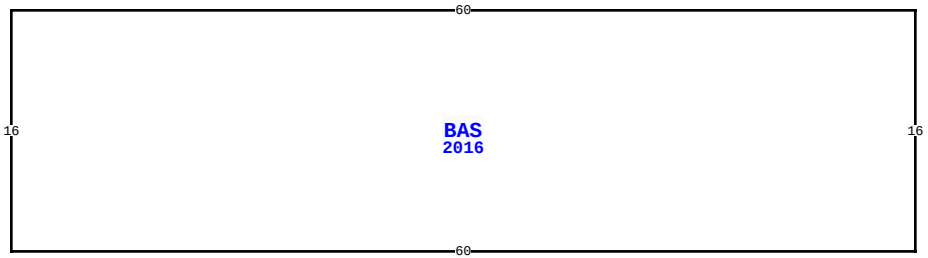

48143 EPHESUS RD, HILLIARD

BLD DATE	02/25/2022	KK	LGL DATE	
XF DATE	02/25/2022	KK	LAND DATE	05/08/2026 MLU
INC DATE			AG DATE	

NASSAU COUNTY PROPERTY

PAGE 2 of 2 4

VALUATION SUMMARY

VALUATION BY		STANDARD
Tax Group: 4	Tax Dist:	
BUILDING MARKET VALUE		1,136,175
TOTAL MARKET OB/XF VALUE		33,402
TOTAL LAND VALUE - MARKET		140,000
TOTAL MARKET VALUE		1,309,577
SOH/AGL Deduction		705,037
ASSESSED VALUE		604,540
TOTAL EXEMPTION VALUE	02	604,540
BASE TAXABLE VALUE		0
TOTAL JUST VALUE		1,309,577
NCON VALUE		0
INCOME VALUE		
PREVIOUS YEAR MKT VALUE		1,225,597

PERMIT NUM	DESCRIPTION	AMT	ISSUED

SALES DATA

OFF RECORD Number	DATE	TYPE INST	Q U	V I	RSN CD	SALE PRICE

BUILDING NOTES

BUILDING DIMENSIONS

BAS=[YR=2016] W60 S16 E60 N16$.

EXTRA FEATURES

L N	OB/XF CODE	DESCRIPTION	BLD	CAP	L	W	UNITS	UT	Adj R	ADJ UNIT PRICE	ORIG COND	YEAR ON	YEAR ACTUAL	Q	% COND	OB/XF MKT VALUE	NOTES

LAND DESCRIPTION

TOTAL OB/XF 0

L N	USE CODE	CLS	LAND USE DESCRIPTION	CAP	R D	LOC ZONE	FRONT	DEPTH	TOT LND UTS	UNIT TYPE	D T	DPTH FACT	% COND	TOT ADJ	UNIT PRICE	ADJ UNIT PRICE	LAND VALUE	OTHER ADJUSTMENTS AND NOTES	YEAR	DENSITY	DECL	FRZ	YR	CONSRV

REVIEW DATE 12/16/2025 BY TW Total Acres: 4.00 Total Land Value: 140,000 Market: 0 Agricultural: 0 Common: 140,000 PRINTED 07/09/2026 BY SYS