LOTS 5 & 6
IN OR 1956/35
EX R/W IN OR 442/677

MIZELL JUSTIN B & REGINA A
45277 HODGES RD
CALLAHAN, FL 32011

2026

28-2N-25-3100-0005-0000

BUILDING CHARACTERISTICS

ELEMENT	CD	CONSTRUCTION
Exterior Wall	31	HARDIE BRD 90
Exterior Wall	21	STONE 10
Roof Structur	08	IRREGULAR 100
Roof Cover	03	COMP SHNGL 100
Interior Wall	05	DRYWALL 100
Interior Floo	11	CLAY TILE 100
Air Condition	03	CENTRAL 100
Heating Type	04	AIR DUCTED 100
Bedrooms		3 100
Bathrooms		3.5 100
Frame	02	WOOD FRAME 100
Stories	1.	1. 100
Units		0 100
Occupancy	00	NONE 100
Quality	05	Quality Level 05
DOR CODE	0100	SINGLE FAMILY
MAP NUM		MKT AREA 08
NEIGHBORHOOD/LOC	8026.00	

AREA TYPE	TOTAL GROSS AREA	PCT OF BASE	YEAR	TOT ADJ AREA	SUBAREA MARKET VALUE
BAS	2,768	100	2018	2,768	464,930
FGR	750	55	2017	412	69,202
FOP	1,005	30	2018	302	50,726
STP	30	10	2018	3	504
UCP	374	20	2026	75	12,598
TOTALS	4,927			3,560	597,959

MARKET ADJUSTMENTS

TYPE	MDL	EFF. AREA	TOT ADJ PTS	EFF. BASE RATE	REPL. COST NEW	AYB	EYB	ECON	FNCT		NORM	% COND
0900	01	3,560	124.6410	173.25	616,770	2018	2018	0	0	0	3.05	96.95

2 SNGL FAM 100% - 2019 Heated Area: 2768 HX Base Yr 2019

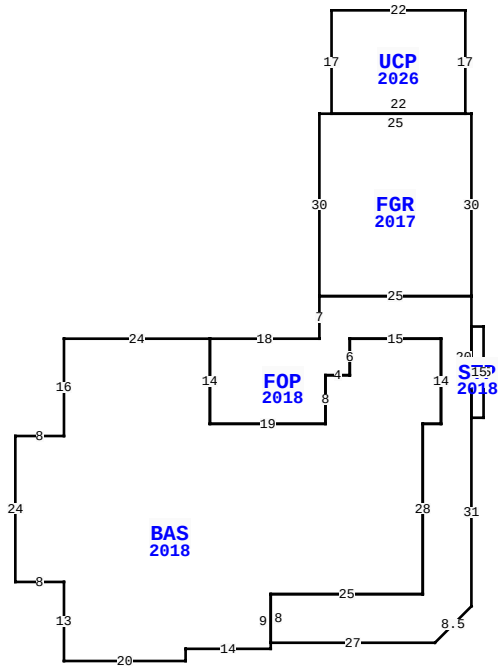

45277 HODGES RD, CALLAHAN

BLD DATE		LGL DATE	
XF DATE		LAND DATE	05/07/2026 MLU
INC DATE		AG DATE	

NASSAU COUNTY PROPERTY

PAGE 1 of 2 6

VALUATION SUMMARY

VALUATION BY		STANDARD
Tax Group: 6	Tax Dist:	
BUILDING MARKET VALUE		682,744
TOTAL MARKET OB/XF VALUE		64,550
TOTAL LAND VALUE - MARKET		197,000
TOTAL MARKET VALUE		944,294
SOH/AGL Deduction		445,259
ASSESSED VALUE		499,035
TOTAL EXEMPTION VALUE	HX HB	51,411
BASE TAXABLE VALUE		447,624
TOTAL JUST VALUE		944,294
NCON VALUE		0
INCOME VALUE		
PREVIOUS YEAR MKT VALUE		922,140

PERMIT NUM	DESCRIPTION	AMT	ISSUED
21004751	GARAGE	95,145	04/16/2021
18006748	XFOB	33,125	08/01/2018
18003639	SWIM POOL	32,000	05/01/2018
17004126	CO ISSUED	0	04/20/2018
17004126	NEW CONSTR	370,244	07/01/2017
C5228	CO ISSUED	0	11/01/2009

SALES DATA

OFF RECORD Number	DATE	TYPE INST	Q / U	V / I	RSN CD	SALE PRICE
1956/0035	12/31/2014	SW	U	I	11	100
GRANTOR: MIZELL MICHAEL DAVID						
GRANTEE: MIZELL JUSTIN B & R						
1336/0987	7/27/2005	TD	Q	I	01	100
GRANTOR: MIZELL JEAN H TRUSTEE						
GRANTEE: MIZELL MICHAEL DAVI						

BUILDING NOTES

EXTRA FEATURES

LN	OB/XF CODE	DESCRIPTION	BLD	CAP	L	W	UNITS	UT	Adj R	ADJ UNIT PRICE	ORIG COND	YEAR ON	YEAR ACTUAL	Q	% COND	OB/XF MKT VALUE	NOTES
4	0860	POOL/SPA	0	100	0	0	1.00	UT	50,000.00	50,000.00	100	2018	2018	04	95	47,500	
7	0911	SCRN RM A	0	100	32	40	1,280.00	SF	18.00	18.00	100	2018	2018	3	74	17,050	

BUILDING DIMENSIONS

BAS=[YR=2018;ORIG=-43,37] W24 S16 W8 S24 E8 S13 E20 N2 E14 N9 E25 N28 E3 N14 W15 S6 W4 S8 W19 N14 $
FOP=[YR=2018;ORIG=-25,30] S7 W18 S14 E19 N8 E4 N6 E15 S14 W3 S28 W25 S8 E27 U6R6 N31 N20 W25 $
FGR=[YR=2017;ORIG=0,0] W25 S30 E25 N30 $
UCP=[YR=2026;ORIG=-23,-17] E22 S17 W22 N17 $
STP=[YR=2018;ORIG=0,50] E2 N15 W2 S15 $
.

LAND DESCRIPTION

TOTAL OB/XF 64,550

LN	USE CODE	CLS	LAND USE DESCRIPTION	CAP	RD	LOC ZONE	FRONT	DEPTH	TOT LND UTS	UNIT TYPE	DT	DPTH FACT	% COND	TOT ADJ	UNIT PRICE	ADJ UNIT PRICE	LAND VALUE	OTHER ADJUSTMENTS AND NOTES	YEAR	DENSITY	DECL	FRZ	YR	CONSRV
1	000100	C	RES	100	0005	OR	0.00	0.00	9.85	AC		1.00	1.00	1.00	20,000.00	20,000.00	197,000							

REVIEW DATE 01/01/2023 BY CD Total Acres: 9.85 Total Land Value: 197,000 Market: 0 Agricultural: 0 Common: 197,000 PRINTED 07/09/2026 BY SYS

LOTS 5 & 6
IN OR 1956/35
EX R/W IN OR 442/677

MIZELL JUSTIN B & REGINA A
45277 HODGES RD
CALLAHAN, FL 32011

2026

28-2N-25-3100-0005-0000

BUILDING CHARACTERISTICS

ELEMENT	CD	CONSTRUCTION
Exterior Wall	25	MOD METAL 100
Roof Structur	03	GABLE/HIP 100
Roof Cover	12	MODULAR MT 100
Interior Wall	05	DRYWALL 100
Interior Floo	03	CONC FINSH 100
Air Condition	01	NONE 100
Heating Type	01	NONE 100
Bedrooms		0 100
Bathrooms		0 100
Frame	05	STEEL 100
Stories	1.	1. 100
Units		0 100
Occupancy	00	NONE 100
Quality	06	Quality Level 06

DOR CODE 0100 SINGLE FAMILY
MAP NUM
MKT AREA 08
NEIGHBORHOOD/LOC 8026.00

AREA TYPE	TOTAL GROSS AREA	PCT OF BASE	YEAR	TOT ADJ AREA	SUBAREA MARKET VALUE
BAS	1,500	100	2021	1,500	45,259
BAS	700	100	2026	700	21,121
FCP	900	25	2021	225	6,789
FCP	420	25	2026	105	3,168
FCP	1,120	25	2026	280	8,448
TOTALS	4,640			2,810	84,785

MARKET ADJUSTMENTS

TYPE	MDL	EFF. AREA	TOT ADJ PTS	EFF. BASE RATE	REPL. COST NEW	AYB	EYB	ECON	FNCT		NORM	% COND
6500	01	2,810	80.5920	31.43	88,318	2021	2021	0	0	0	4.00	96.00

3 GARAGE RES 100% - 2019 Heated Area: 2200 HX Base Yr 2019

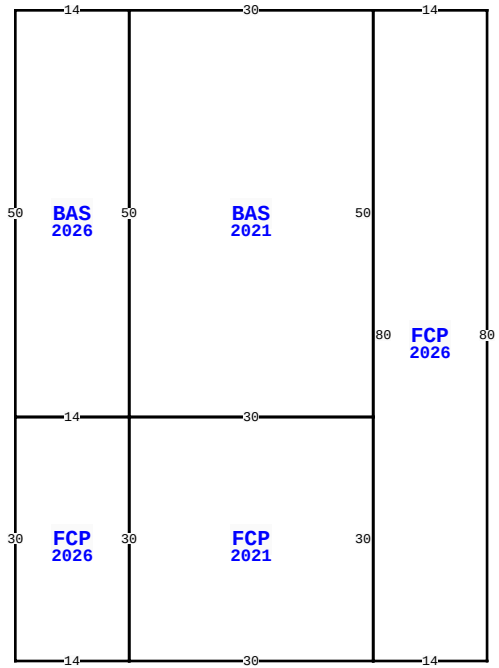

45277 HODGES RD, CALLAHAN

BLD DATE		LGL DATE	
XF DATE		LAND DATE	05/07/2026 MLU
INC DATE		AG DATE	

NASSAU COUNTY PROPERTY

PAGE 2 of 2 6

VALUATION SUMMARY

VALUATION BY		STANDARD
Tax Group: 6	Tax Dist:	
BUILDING MARKET VALUE		682,744
TOTAL MARKET OB/XF VALUE		64,550
TOTAL LAND VALUE - MARKET		197,000
TOTAL MARKET VALUE		944,294
SOH/AGL Deduction		445,259
ASSESSED VALUE		499,035
TOTAL EXEMPTION VALUE	HX HB	51,411
BASE TAXABLE VALUE		447,624
TOTAL JUST VALUE		944,294
NCON VALUE		0
INCOME VALUE		
PREVIOUS YEAR MKT VALUE		922,140

PERMIT NUM	DESCRIPTION	AMT	ISSUED
M0914887	H/AC	0	10/01/2009
P0913978	OTHER	0	10/01/2009
P10406	OTHER	0	12/01/2005
E16218	ELEC OTHER	0	11/01/2005
M10678	MECH OTHER	0	11/01/2005
MH97	MH MOVE-ON	0	06/01/1997

SALES DATA

OFF RECORD Number	DATE	TYPE INST	Q U /	V I /	RSN CD	SALE PRICE
1956/0035	12/31/2014	SW	U	I	11	100
GRANTOR: MIZELL MICHAEL DAVID						
GRANTEE: MIZELL JUSTIN B & R						
1336/0987	7/27/2005	TD	Q	I	01	100
GRANTOR: MIZELL JEAN H TRUSTEE						
GRANTEE: MIZELL MICHAEL DAVI						

BUILDING NOTES

BUILDING DIMENSIONS

BAS=[YR=2021;ORIG=0,0] W30 S50 E30 N50 $
FCP=[YR=2021;ORIG=-30,50] S30 E30 N30 W30 $
BAS=[YR=2026;ORIG=-30,0] W14 S50 E14 N50 $
FCP=[YR=2026;ORIG=-44,50] E14 S30 W14 N30 $
FCP=[YR=2026;ORIG=0,0] E14 S80 W14 N80 $
.

EXTRA FEATURES

L N	OB/XF CODE	DESCRIPTION	BLD	CAP	L	W	UNITS	UT	Adj R	ADJ UNIT PRICE	ORIG COND	YEAR ON	YEAR ACTUAL	Q	% COND	OB/XF MKT VALUE	NOTES

LAND DESCRIPTION

TOTAL OB/XF 0

L N	USE CODE	CLS	LAND USE DESCRIPTION	CAP	R D	LOC ZONE	FRONT	DEPTH	TOT LND UTS	UNIT TYPE	D T	DPTH FACT	% COND	TOT ADJ	UNIT PRICE	ADJ UNIT PRICE	LAND VALUE	OTHER ADJUSTMENTS AND NOTES	YEAR	DENSITY	DECL	FRZ	YR	CONSRV

REVIEW DATE 01/01/2023 BY CD Total Acres: 9.85 Total Land Value: 197,000 Market: 0 Agricultural: 0 Common: 197,000 PRINTED 07/09/2026 BY SYS