PT OF SE1/4
IN OR 2377/437
PARCELS 7-14 & 7-10

EDDY JASON R & SHERRON
613220 RIVER RD
CALLAHAN, FL 32011

2026

28-2N-24-0000-0007-0140

NASSAU COUNTY PROPERTY

BUILDING CHARACTERISTICS

ELEMENT	CD	CONSTRUCTION
Exterior Wall	17	CB STUCCO 70
Exterior Wall	05	AVERAGE 30
Roof Structur	03	GABLE/HIP 100
Roof Cover	03	COMP SHNGL 100
Interior Wall	05	DRYWALL 100
Interior Floo	11	CLAY TILE 50
Interior Floo	14	CARPET 50
Air Condition	03	CENTRAL 100
Heating Type	04	AIR DUCTED 100
Bedrooms		4 100
Bathrooms		2 100
Frame	03	MASONRY 100
Stories	1.5	1.5 100
Units		0 100
Occupancy	00	NONE 100
Quality	02	Quality Level 02
DOR CODE	0100	SINGLE FAMILY
MAP NUM		MKT AREA 08
NEIGHBORHOOD/LOC	8001.00	

AREA TYPE	TOTAL GROSS AREA	PCT OF BASE	YEAR	TOT ADJ AREA	SUBAREA MARKET VALUE
BAL	112	15	2026	17	1,782
BAS	1,961	100	2007	1,961	205,568
FGR	567	55	2007	312	32,706
FOP	24	30	2007	7	734
FUS	609	100	2007	609	63,840
TOTALS	3,273			2,906	304,630

MARKET ADJUSTMENTS

TYPE	MDL	EFF. AREA	TOT ADJ PTS	EFF. BASE RATE	REPL. COST NEW	AYB	EYB	ECON	FNCT		NORM	% COND
0900	01	2,906	99.0337	137.66	400,040	1974	1974	0	0	0	23.85	76.15

1 SNGL FAM 100% - 2024 Heated Area: 2570 HX Base Yr 2024

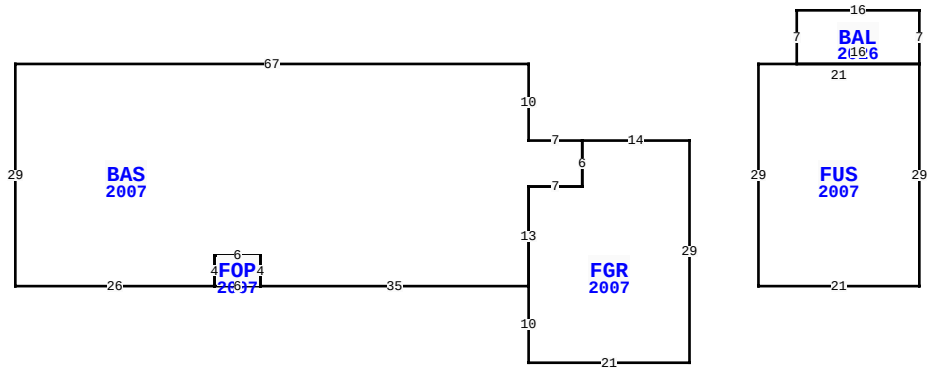

613220 RIVER RD, CALLAHAN

BLD DATE	01/10/2007 JH	LGL DATE	
XF DATE		LAND DATE	05/08/2026 MLU
INC DATE		AG DATE	

NASSAU COUNTY PROPERTY — VALUATION SUMMARY

VALUATION BY		STANDARD
Tax Group: 6	Tax Dist:	
BUILDING MARKET VALUE		304,630
TOTAL MARKET OB/XF VALUE		8,115
TOTAL LAND VALUE - MARKET		108,640
TOTAL MARKET VALUE		421,385
SOH/AGL Deduction		30,907
ASSESSED VALUE		390,478
TOTAL EXEMPTION VALUE	HX HB	51,411
BASE TAXABLE VALUE		339,067
TOTAL JUST VALUE		421,385
NCON VALUE		0
INCOME VALUE		
PREVIOUS YEAR MKT VALUE		432,889

PERMIT NUM	DESCRIPTION	AMT	ISSUED
19012090	REPAIR/RRF	5,800	11/21/2019

SALES DATA

OFF RECORD Number	DATE	TYPE INST	Q / U	V / I	RSN CD	SALE PRICE
2377/0437	7/13/2020	WD	Q	I	01	312,000
GRANTOR: SVOBODA KIRK T & JESS						
GRANTEE: EDDY JASON R & SHER						
2318/1676	10/25/2019	QC	U	I	11	100
GRANTOR: SVOBODA KIRK T						
GRANTEE: SVOBODA KIRK T						

BUILDING NOTES

BUILDING DIMENSIONS

BAS=[YR=2007;ORIG=0,0] W67 S29 E26 N4 E6 S4 E35 N13 E7 N6 W7 N10 $
FUS=[YR=2007;ORIG=30,0] E21 S29 W21 N29 $
FGR=[YR=2007;ORIG=0,29] S10 E21 N29 W14 S6 W7 S13 $
FOP=[YR=2007;ORIG=-41,29] E6 N4 W6 S4 $
PTR=[YR=2007;ORIG=0,0] E30 W30 $
BAL=[YR=2026;ORIG=35,-7] E16 S7 W16 N7 $
.

EXTRA FEATURES

LN	OB/XF CODE	DESCRIPTION	BLD	CAP	L	W	UNITS	UT	Adj R	ADJ UNIT PRICE	ORIG COND	YEAR ON	YEAR ACTUAL	Q	% COND	OB/XF MKT VALUE	NOTES
1	0500	FP-PRE FAB	0	100	0	0	1.00	UT	3,500.00	3,500.00	100	1974	1974	3	31.6	1,106	
3	0350	CARPORT WD	0	100	28	14	392.00	SF	13.00	13.00	100	1986	1986	3	20	1,019	
6	0681	POLE SHED	0	100	24	12	288.00	SF	15.00	15.00	100	2005	2005	3	32	1,382	
7	0681	POLE SHED	0	100	24	12	288.00	SF	15.00	15.00	100	2005	2005	3	32	1,382	
8	0510	GARAGE WD-	0	100	24	12	288.00	SF	35.00	35.00	100	2005	2005	3	32	3,226	

LAND DESCRIPTION

TOTAL OB/XF 8,115

LN	USE CODE	CLS	LAND USE DESCRIPTION	CAP	RD	LOC ZONE	FRONT	DEPTH	TOT LND UTS	UNIT TYPE	DT	DPTH FACT	% COND	TOT ADJ	UNIT PRICE	ADJ UNIT PRICE	LAND VALUE	OTHER ADJUSTMENTS AND NOTES	YEAR	DENSITY	DECL	FRZ	YR	CONSRV
1	000100	C	RES	100	0004	OR	0.00	0.00	3.88	AC		1.00	1.00	1.00	28,000.00	28,000.00	108,640							

REVIEW DATE 01/01/2023 BY CD Total Acres: 3.88 Total Land Value: 108,640 Market: 0 Agricultural: 0 Common: 108,640 PRINTED 07/09/2026 BY SYS