PT OF S1/2 OF NW1/4 &
PT OF N1/2 OF SW1/4 OF
SEC 27-3N-25E IN OR 1975/505

PEEPLES HERBERT W JR & TAMMIE
55065 COUNTREE LIFE
CALLAHAN, FL 32011

2026

27-3N-25-0000-0003-0090

BUILDING CHARACTERISTICS

ELEMENT	CD	CONSTRUCTION
Exterior Wall	20	FACE BRICK 100
Roof Structur	03	GABLE/HIP 100
Roof Cover	03	COMP SHNGL 100
Interior Wall	05	DRYWALL 100
Interior Floo	12	HARDWOOD 100
Air Condition	03	CENTRAL 100
Heating Type	04	AIR DUCTED 100
Bedrooms		2 100
Bathrooms		2 100
Frame	02	WOOD FRAME 100
Stories	1.	1. 100
Units		0 100
Occupancy	00	NONE 100
Quality	03	Quality Level 03

DOR CODE 5000 IMPROVED AG
MAP NUM | MKT AREA 05
NEIGHBORHOOD/LOC 5001.00

AREA TYPE	TOTAL GROSS AREA	PCT OF BASE	YEAR	TOT ADJ AREA	SUBAREA MARKET VALUE
BAS	1,550	100	2018	1,550	230,061
FGR	510	55	2018	280	41,559
FOP	128	30	2018	38	5,640
PTO	252	5	2018	13	1,929
STP	12	10	2018	1	149
STR	24	10	2018	2	297
UUS	165	50	2018	82	12,171
TOTALS	2,641			1,966	291,805

MARKET ADJUSTMENTS

TYPE	MDL	EFF. AREA	TOT ADJ PTS	EFF. BASE RATE	REPL. COST NEW	AYB	EYB	ECON	FNCT		NORM	% COND
0900	01	1,966	112.7000	156.65	307,974	2018	2018	0	0	0	5.25	94.75

1 SNGL FAM 100% - 2019 Heated Area: 1550 HX Base Yr 2019

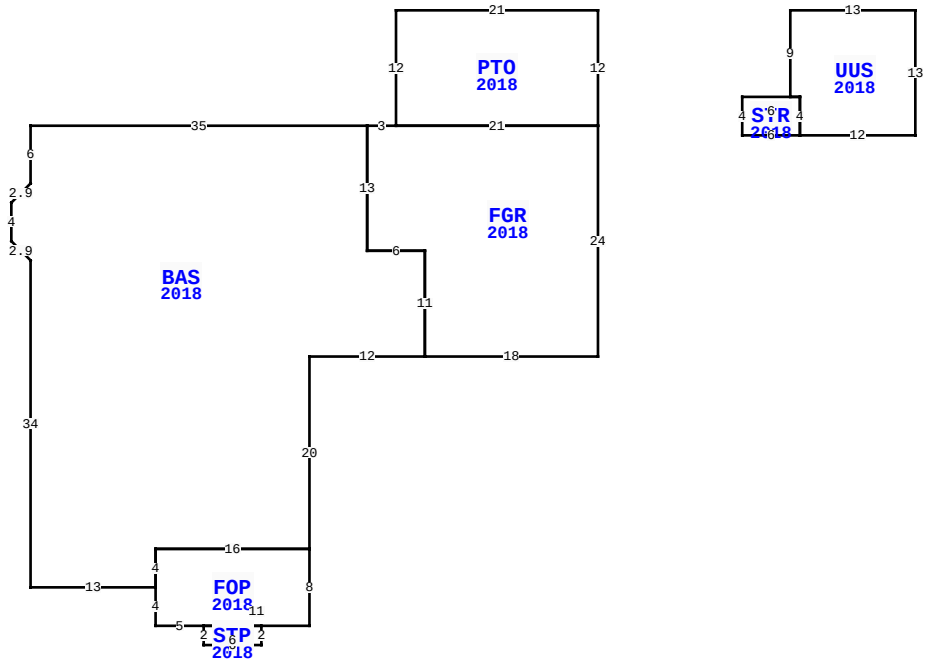

55065 COUNTREE LIFE WAY, CALLAHAN

BLD DATE		LGL DATE	
XF DATE		LAND DATE	05/08/2026 MLU
INC DATE		AG DATE	03/28/2025 KBA

NASSAU COUNTY PROPERTY

PAGE 1 of 2 4

VALUATION SUMMARY

VALUATION BY		STANDARD
Tax Group: 4	Tax Dist:	
BUILDING MARKET VALUE		340,864
TOTAL MARKET OB/XF VALUE		0
TOTAL LAND VALUE - MARKET		366,800
TOTAL MARKET VALUE		513,094
SOH/AGL Deduction		223,836
ASSESSED VALUE		289,258
TOTAL EXEMPTION VALUE	HX HB	51,411
BASE TAXABLE VALUE		237,847
TOTAL JUST VALUE		707,664
NCON VALUE		0
INCOME VALUE		
PREVIOUS YEAR MKT VALUE		728,677

PERMIT NUM	DESCRIPTION	AMT	ISSUED
17000352	CO ISSUED	0	05/08/2018
18004188	GARAGE	0	05/01/2018
17000352	NEW CONSTR	199,195	03/01/2017

SALES DATA

OFF RECORD Number	DATE	TYPE INST	Q / U	V / I	RSN CD	SALE PRICE
1975/0505	4/17/2015	WD	Q	V	01	114,000

GRANTOR: PAGE COREY & CHRISTIN
GRANTEE: PEEPLES HERBERT W J

BUILDING NOTES

BUILDING DIMENSIONS

PTO=[YR=2018] W21 S12 FGR=[YR=2018] W3 BAS=[YR=2018] W35 S6 L2 D2 S4 D2 R2 S34 E13 FOP=[YR=2018] S4E5 STP=[YR=2018] S2 E6 N2 W6$ E11 N8 W16 S4$ N4 E16 N20 E12 N11 W6 N13$ S13 E6 S11 E18 N24 W21$ E21 N12$ PTR= E20 UUS=[YR=2018] E13 S13 W12 STR=[YR=2018] W6 N4 E6 S4$ N4 W1 N9 $ W20$.

EXTRA FEATURES

LN	OB/XF CODE	DESCRIPTION	BLD	CAP	L	W	UNITS	UT	Adj R	ADJ UNIT PRICE	ORIG COND	YEAR ON	YEAR ACTUAL	Q	% COND	OB/XF MKT VALUE	NOTES

LAND DESCRIPTION

TOTAL OB/XF 0

LN	USE CODE	CLS	LAND USE DESCRIPTION	CAP	RD	LOC ZONE	FRONT	DEPTH	TOT LND UTS	UNIT TYPE	DT	DPTH FACT	% COND	TOT ADJ	UNIT PRICE	ADJ UNIT PRICE	LAND VALUE	OTHER ADJUSTMENTS AND NOTES	YEAR	DENSITY	DECL	FRZ	YR	CONSRV
1	005000	C	AGRICULTURAL	100	0007	OR	0.00	0.00	2.00	AC		1.00	1.00	1.00	25,000.00	25,000.00	50,000							
2	005000	C	AGRICULTURAL	100	0007	OR	0.00	0.00	8.00	AC		1.00	1.00	1.00	14,600.00	14,600.00	116,800							
3	005901	A	HARDWOOD SI	0		OR	0.00	0.00	3.00	AC		1.00	1.00	1.00	200.00	200.00	600							
4	005400	A	TIMBER 1 N S	0		OR	0.00	0.00	7.00	AC		1.00	1.00	1.00	690.00	690.00	4,830							
5	009910	M	MARKET VALUE	0		OR	0.00	0.00	10.00	AC		1.00	1.00	1.00	20,000.00	20,000.00	200,000							

REVIEW DATE 02/05/2024 BY KWA Total Acres: 20.00 Total Land Value: 172,230 Market: 200,000 Agricultural: 5,430 Common: 166,800 PRINTED 07/09/2026 BY SYS

PT OF S1/2 OF NW1/4 &
PT OF N1/2 OF SW1/4 OF
SEC 27-3N-25E IN OR 1975/505

PEEPLES HERBERT W JR & TAMMIE
55065 COUNTREE LIFE
CALLAHAN, FL 32011

2026

27-3N-25-0000-0003-0090

BUILDING CHARACTERISTICS

ELEMENT	CD	CONSTRUCTION
Exterior Wall	25	MOD METAL 100
Roof Structur	10	STEEL FRME 100
Roof Cover	12	MODULAR MT 100
Interior Wall	07	NONE 100
Interior Floo	03	CONC FINSH 100
Air Condition	01	NONE 100
Heating Type	01	NONE 100
Bedrooms		0 100
Bathrooms		0 100
Frame	05	STEEL 100
Quality	06	Quality Level 06

DOR CODE	5000	IMPROVED AG	
MAP NUM		MKT AREA	05
NEIGHBORHOOD/LOC	5001.00		

AREA TYPE	TOTAL GROSS AREA	PCT OF BASE	YEAR	TOT ADJ AREA	SUBAREA MARKET VALUE
BAS	2,400	100	2024	2,400	49,059
TOTALS	2,400			2,400	49,059

MARKET ADJUSTMENTS

TYPE	MDL	EFF. AREA	TOT ADJ PTS	EFF. BASE RATE	REPL. COST NEW	AYB	EYB	ECON	FNCT		NORM	% COND
6500	01	2,400	56.3500	21.98	52,752	2018	2018	0	0	0	7.00	93.00

2 GARAGE RES 100% - 2019 Heated Area: 2400 HX Base Yr 2019

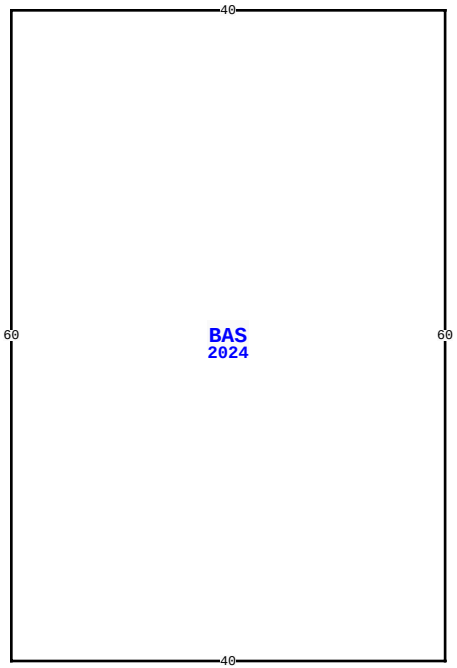

55065 COUNTREE LIFE WAY, CALLAHAN

BLD DATE		LGL DATE	
XF DATE		LAND DATE	05/08/2026 MLU
INC DATE		AG DATE	03/28/2025 KBA

NASSAU COUNTY PROPERTY

PAGE 2 of 2 4

VALUATION SUMMARY

VALUATION BY		STANDARD
Tax Group: 4	Tax Dist:	
BUILDING MARKET VALUE		340,864
TOTAL MARKET OB/XF VALUE		0
TOTAL LAND VALUE - MARKET		366,800
TOTAL MARKET VALUE		513,094
SOH/AGL Deduction		223,836
ASSESSED VALUE		289,258
TOTAL EXEMPTION VALUE	HX HB	51,411
BASE TAXABLE VALUE		237,847
TOTAL JUST VALUE		707,664
NCON VALUE		0
INCOME VALUE		
PREVIOUS YEAR MKT VALUE		728,677

PERMIT NUM	DESCRIPTION	AMT	ISSUED

SALES DATA

OFF RECORD Number	DATE	TYPE INST	Q / U	V / I	RSN CD	SALE PRICE
1975/0505	4/17/2015	WD	Q	V	01	114,000

GRANTOR: PAGE COREY & CHRISTIN

GRANTEE: PEEPLES HERBERT W J

BUILDING NOTES

BUILDING DIMENSIONS

BAS=[YR=2024;ORIG=50,0] E40 S60 W40 N60 $
.

EXTRA FEATURES

L N	OB/XF CODE	DESCRIPTION	BLD	CAP	L	W	UNITS	UT	Adj R	ADJ UNIT PRICE	ORIG COND	YEAR ON	YEAR ACTUAL	Q	% COND	OB/XF MKT VALUE	NOTES

LAND DESCRIPTION

TOTAL OB/XF 0

L N	USE CODE	CLS	LAND USE DESCRIPTION	CAP	R D	LOC ZONE	FRONT	DEPTH	TOT LND UTS	UNIT TYPE	D T	DPTH FACT	% COND	TOT ADJ	UNIT PRICE	ADJ UNIT PRICE	LAND VALUE	OTHER ADJUSTMENTS AND NOTES	YEAR	DENSITY	DECL	FRZ	YR	CONSRV

REVIEW DATE 02/05/2024 BY KWA Total Acres: 20.00 Total Land Value: 172,230 Market: 200,000 Agricultural: 5,430 Common: 166,800 PRINTED 07/09/2026 BY SYS