BLOCK 3 LOT 14
IN OR 1111/1109
NASSAU LAKES 1B REPLAT PB6/175

SCOTT FREDERICK M
96111 CAYMAN CIRCLE
FERNANDINA BEACH, FL 32034

2026

27-2N-28-141B-0003-0140

NASSAU COUNTY PROPERTY

BUILDING CHARACTERISTICS

ELEMENT	CD	CONSTRUCTION
Exterior Wall	05	AVERAGE 80
Exterior Wall	20	FACE BRICK 20
Roof Structur	03	GABLE/HIP 100
Roof Cover	03	COMP SHNGL 100
Interior Wall	05	DRYWALL 100
Interior Floo	09	PINE WOOD 50
Interior Floo	14	CARPET 50
Air Condition	03	CENTRAL 100
Heating Type	04	AIR DUCTED 100
Bedrooms		3 100
Bathrooms		2.5 100
Frame	02	WOOD FRAME 100
Stories	1.5	1.5 100
Units		0 100
Occupancy	00	NONE 100
Quality	01	Quality Level 01
DOR CODE	0100	SINGLE FAMILY
MAP NUM		MKT AREA 04
NEIGHBORHOOD/LOC	4011.00	

AREA TYPE	TOTAL GROSS AREA	PCT OF BASE	YEAR	TOT ADJ AREA	SUBAREA MARKET VALUE
BAS	2,176	100	2004	2,176	224,461
FGR	720	55	2004	396	40,849
FOP	176	30	2004	53	5,467
FOP	192	30	2004	58	5,983
FUS	720	100	2012	720	74,270
TOTALS	3,984			3,403	351,030

MARKET ADJUSTMENTS

TYPE	MDL	EFF. AREA	TOT ADJ PTS	EFF. BASE RATE	REPL. COST NEW	AYB	EYB	ECON	FNCT		NORM	% COND
0900	01	3,403	83.7108	116.36	395,973	2004	2004	0	0	0	11.35	88.65

1 SNGL FAM 100% - 2005 Heated Area: 2896 HX Base Yr 2005

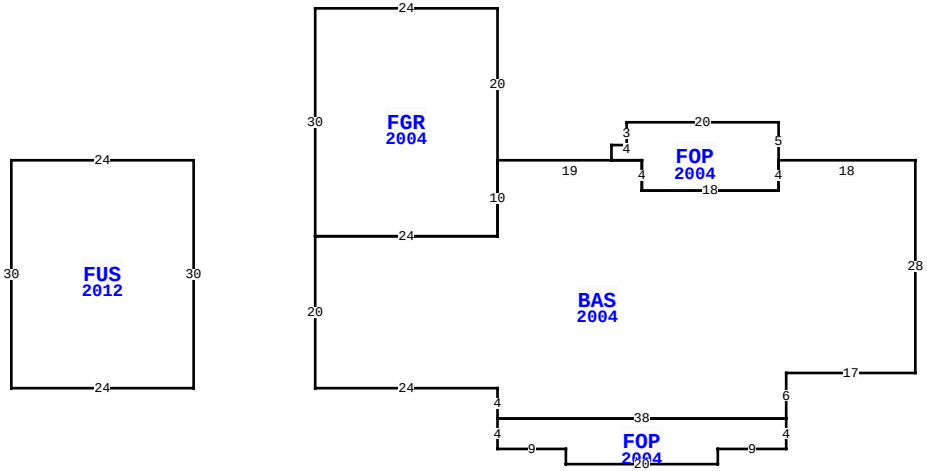

BLD DATE		LGL DATE	
XF DATE		LAND DATE	04/09/2026 MLU
INC DATE		AG DATE	

96111 CAYMAN CIR, FERNANDINA BEACH

NASSAU COUNTY PROPERTY — VALUATION SUMMARY

VALUATION BY		STANDARD
Tax Group: 4	Tax Dist:	
BUILDING MARKET VALUE		351,030
TOTAL MARKET OB/XF VALUE		12,435
TOTAL LAND VALUE - MARKET		121,000
TOTAL MARKET VALUE		484,465
SOH/AGL Deduction		241,489
ASSESSED VALUE		242,976
TOTAL EXEMPTION VALUE	VX HX HB	56,411
BASE TAXABLE VALUE		186,565
TOTAL JUST VALUE		484,465
NCON VALUE		0
INCOME VALUE		
PREVIOUS YEAR MKT VALUE		498,570

PERMIT NUM	DESCRIPTION	AMT	ISSUED
R1906748	REPAIR/RRF	16,528	06/25/2019
B1428959	GARAGE	16,882	06/01/2014

SALES DATA

OFF RECORD Number	DATE	TYPE INST	Q / U	V / I	RSN CD	SALE PRICE
1111/1109	2/04/2003	WD	Q	V		38,000
GRANTOR: NO MO NASSAU LAKES IN						
GRANTEE: SCOTT FREDERICK M						
1097/0351	11/26/2002	WD	U	V	19	390,000
GRANTOR: NASSAU LAKES INC						
GRANTEE: NO MO NASSAU LAKES						

BUILDING NOTES

BUILDING DIMENSIONS

BAS=[YR=2004] W18 FOP=[YR=2004] N5 W20 S3 W2 S2 E4 S4 E18 N4$ S4 W18 N4 W19 FGR=[YR=2004] N20 W24 S30 E24 N10$ S10 W24 S20 E24 S4 FOP=[YR=2004] S4 E9 S2 E20 N2 E9 N4 W38$ E38 N6 E17 N28$ PTR=W95 FUS=[YR=2012] W24 S30 E24 N30$ E95$.

EXTRA FEATURES

LN	OB/XF CODE	DESCRIPTION	BLD	CAP	L	W	UNITS	UT	Adj R	ADJ UNIT PRICE	ORIG COND	YEAR ON	YEAR ACTUAL	Q	% COND	OB/XF MKT VALUE	NOTES
1	0500	FP-PRE FAB	0	100	0	0	1.00	UT	3,500.00	3,500.00	100	2004	2004	3	86	3,010	
4	0510	GARAGE WD-	0	100	18	22	396.00	SF	35.00	35.00	100	2014	2014	3	68	9,425	

LAND DESCRIPTION

TOTAL OB/XF 12,435

LN	USE CODE	CLS	LAND USE DESCRIPTION	CAP	RD	LOC ZONE	FRONT	DEPTH	TOT LND UTS	UNIT TYPE	DT	DPTH FACT	% COND	TOT ADJ	UNIT PRICE	ADJ UNIT PRICE	LAND VALUE	OTHER ADJUSTMENTS AND NOTES	YEAR	DENSITY	DECL	FRZ	YR	CONSRV
1	000134	C	RES POND	100		PUD	0.00	0.00	1.00	LT		1.00	1.00	1.10	110,000.00	121,000.00	121,000							

REVIEW DATE 01/01/2023 BY CD Total Acres: 0.00 Total Land Value: 121,000 Market: 0 Agricultural: 0 Common: 121,000 PRINTED 07/09/2026 BY SYS