LOT 525
AMELIA NATIONAL PHASE ONE-C
SEGMENT THREE & PHASE ONE-E

FOLTZ JEFFREY HOWARD & SHEILA KISER
95468 GOLDEN GLOW DRIVE
FERNANDINA BEACH, FL 32034

**2026**

**27-2N-28-006C-0525-0000**

## NASSAU COUNTY PROPERTY



## BUILDING CHARACTERISTICS

| ELEMENT | CD | CONSTRUCTION |
|---|---|---|
| Exterior Wall | 31 | HARDIE BRD 100 |
| Roof Structur | 08 | IRREGULAR 100 |
| Roof Cover | 03 | COMP SHNGL 100 |
| Interior Wall | 05 | DRYWALL 100 |
| Interior Floo | 11 | CLAY TILE 60 |
| Interior Floo | 14 | CARPET 40 |
| Air Condition | 03 | CENTRAL 100 |
| Heating Type | 04 | AIR DUCTED 100 |
| Bedrooms | | 5 100 |
| Bathrooms | | 4 100 |
| Frame | 02 | WOOD FRAME 100 |
| Stories | 2. | 2. 100 |
| Units | | 0 100 |
| Quality | 02 | Quality Level 02 |
| DOR CODE | 0100 | SINGLE FAMILY |
| MAP NUM | | MKT AREA 04 |
| NEIGHBORHOOD/LOC | 4042.00 | |

| AREA TYPE | TOTAL GROSS AREA | PCT OF BASE | YEAR | TOT ADJ AREA | SUBAREA MARKET VALUE |
|---|---|---|---|---|---|
| BAS | 2,782 | 100 | 2026 | 2,782 | 469,073 |
| FGR | 622 | 55 | 2026 | 342 | 57,665 |
| FOP | 9 | 30 | 2026 | 3 | 506 |
| FOP | 181 | 30 | 2026 | 54 | 9,105 |
| FSP | 238 | 40 | 2026 | 95 | 16,018 |
| FUS | 591 | 100 | 2026 | 591 | 99,649 |
| PTO | 186 | 5 | 2026 | 9 | 1,517 |
| STR | 68 | 10 | 2026 | 7 | 1,180 |
| TOTALS | 4,677 | | | 3,883 | 654,713 |

## MARKET ADJUSTMENTS

| TYPE | MDL | EFF. AREA | TOT ADJ PTS | EFF. BASE RATE | REPL. COST NEW | AYB | EYB | ECON | FNCT | | NORM | % COND |
|---|---|---|---|---|---|---|---|---|---|---|---|---|
| 0500 | 01 | 3,883 | 101.5740 | 168.61 | 654,713 | 2025 | 2025 | 0 | 0 | 0 | 0.00 | 100.00 |

1 SFR CUST 100% - 2026 Heated Area: 3373 HX Base Yr 2026

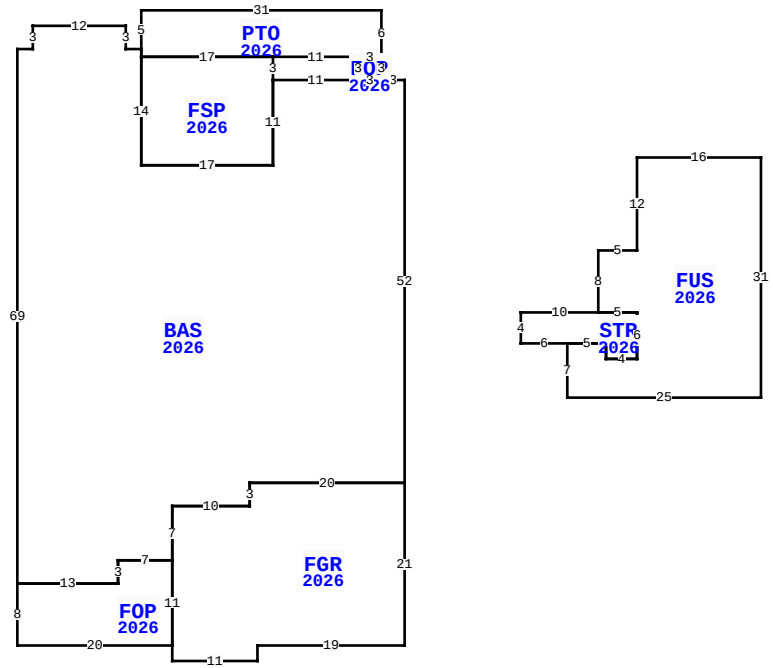


95468 GOLDEN GLOW DR, FERNANDINA BEACH

| | | | |
|---|---|---|---|
| BLD DATE | | LGL DATE | |
| XF DATE | | LAND DATE | 05/08/2025 MLU |
| INC DATE | | AG DATE | |

## VALUATION SUMMARY

| | | |
|---|---|---|
| VALUATION BY | | STANDARD |
| Tax Group: 4 | Tax Dist: | |
| BUILDING MARKET VALUE | | 654,713 |
| TOTAL MARKET OB/XF VALUE | | 0 |
| TOTAL LAND VALUE - MARKET | | 135,000 |
| TOTAL MARKET VALUE | | 789,713 |
| SOH/AGL Deduction | | 0 |
| ASSESSED VALUE | | 789,713 |
| TOTAL EXEMPTION VALUE | HX HB | 51,411 |
| BASE TAXABLE VALUE | | 738,302 |
| TOTAL JUST VALUE | | 789,713 |
| NCON VALUE | | 654,713 |
| INCOME VALUE | | |
| PREVIOUS YEAR MKT VALUE | | 135,000 |

| PERMIT NUM | DESCRIPTION | AMT | ISSUED |
|---|---|---|---|
| CO250002739 | NSFR (T)4415 (H)3 | 619,354 | 03/18/2025 |
| B240010435 | (H)3376 (G)636 (P | 619,354 | 09/10/2024 |

## SALES DATA

| OFF RECORD Number | DATE | TYPE INST | Q U | V I | RSN CD | SALE PRICE |
|---|---|---|---|---|---|---|
| 2778/1320 | 3/27/2025 | WD | Q | I | 01 | 947,800 |
| GRANTOR: RIVERSIDE HOMES OF NO | | | | | | |
| GRANTEE: FOLTZ JEFFREY HOWAR | | | | | | |
| 2664/1829 | 8/29/2023 | WD | Q | V | 05 | 3,250,000 |
| GRANTOR: FF FLORIDA RESIDENTIA | | | | | | |
| GRANTEE: RIVERSIDE HOMES OF | | | | | | |

## BUILDING NOTES

## BUILDING DIMENSIONS

BAS=[YR=2026;ORIG=70,0] W3 W3 W11 S11 W17 N14 N1 W2 N3 W12 S3 W2 S69 E13 N3 E7 N7 E10 N3 E20 N52 $
FGR=[YR=2026;ORIG=70,52] S21 W19 S2 W11 N2 N11 N7 E10 N3 E20 $
FSP=[YR=2026;ORIG=36,11] E17 N11 N3 W17 S14 $
FOP=[YR=2026;ORIG=20,65] S8 E20 N11 W7 S3 W13 $
FOP=[YR=2026;ORIG=64,0] E3 N3 W3 S3 $
PTO=[YR=2026;ORIG=36,-9] E31 S6 W3 W11 W17 N1 N5 $
FUS=[YR=2026;ORIG=100,10] E16 S31 W25 N7 E5 S2 E4 N6 W5 N8 E5 N12 $
STR=[YR=2026;ORIG=91,34] W6 N4 E10 E5 S6 W4 N2 W5 $
.

## EXTRA FEATURES

| LN | OB/XF CODE | DESCRIPTION | BLD | CAP | L | W | UNITS | UT | Adj R | ADJ UNIT PRICE | ORIG COND | YEAR ON | YEAR ACTUAL | Q | % COND | OB/XF MKT VALUE | NOTES |
|---|---|---|---|---|---|---|---|---|---|---|---|---|---|---|---|---|---|

## LAND DESCRIPTION

TOTAL OB/XF 0

| LN | USE CODE | CLS | LAND USE DESCRIPTION | CAP | RD | LOC ZONE | FRONT | DEPTH | TOT LND UTS | UNIT TYPE | DT | DPTH FACT | % COND | TOT ADJ | UNIT PRICE | ADJ UNIT PRICE | LAND VALUE | OTHER ADJUSTMENTS AND NOTES | YEAR | DENSITY | DECL | FRZ | YR | CONSRV |
|---|---|---|---|---|---|---|---|---|---|---|---|---|---|---|---|---|---|---|---|---|---|---|---|---|
| 1 | 000100 | C | RES | 100 | | PUD | 0.00 | 0.00 | 1.00 | LT | | 1.00 | 1.00 | 1.00 | 135,000.00 | 135,000.00 | 135,000 | | | | | | | |

REVIEW DATE 07/30/2025 BY KW Total Acres: 0.00 Total Land Value: 135,000 Market: 0 Agricultural: 0 Common: 135,000 PRINTED 07/09/2026 BY SYS