LOT 464
AMELIA NATIONAL PHASE ONE-C
SEGMENT THREE & PHASE ONE-E

FRISCH 2014 FAMILY REVOCABLE TRUST/FRISCH PAUL J C
95356 BENTGRASS CT
FERNANDINA BEACH, FL 32034

2026

27-2N-28-006C-0464-0000

BUILDING CHARACTERISTICS

ELEMENT	CD	CONSTRUCTION
Exterior Wall	31	HARDIE BRD 100
Roof Structur	08	IRREGULAR 100
Roof Cover	07	CONC TILE 100
Interior Wall	05	DRYWALL 100
Interior Floo	13	LVT/LAMNT 80
Interior Floo	11	CLAY TILE 20
Air Condition	03	CENTRAL 100
Heating Type	04	AIR DUCTED 100
Bedrooms		6 100
Bathrooms		4.5 100
Frame	02	WOOD FRAME 100
Stories	2.	2. 100
Units		0 100
Occupancy	00	NONE 100
Quality	02	Quality Level 02
DOR CODE	0100	SINGLE FAMILY
MAP NUM		MKT AREA 04
NEIGHBORHOOD/LOC	4042.00	

AREA TYPE	TOTAL GROSS AREA	PCT OF BASE	YEAR	TOT ADJ AREA	SUBAREA MARKET VALUE
BAS	68	100	2025	68	20,154
BAS	2,468	100	2025	2,468	731,466
FGR	484	55	2025	266	78,837
FGR	519	55	2025	285	84,468
FOP	140	30	2025	42	12,448
FOP	162	30	2025	49	14,523
FOP	200	30	2025	60	17,783
FOP	348	30	2025	104	30,824
FST	50	55	2025	28	8,299
FUS	1,758	100	2025	1,758	521,036
TOTALS	6,197			5,128	1,519,837

MARKET ADJUSTMENTS

TYPE	MDL	EFF. AREA	TOT ADJ PTS	EFF. BASE RATE	REPL. COST NEW	AYB	EYB	ECON	FNCT		NORM	% COND
0500	12	5,128	178.5411	296.38	1,519,837	2024	2024	0	0	0	0.00	100.00

1 SFR CUST 100% - 2025 Heated Area: 4294 HX Base Yr 2025

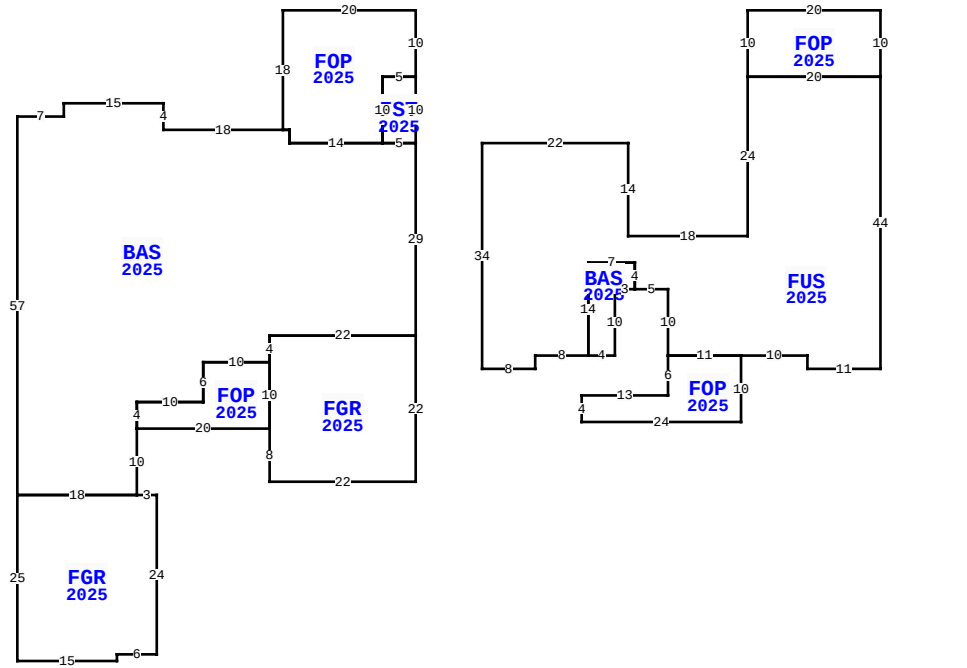

95356 BENTGRASS CT, FERNANDINA BEACH

BLD DATE		LGL DATE	
XF DATE		LAND DATE	05/08/2025 MLU
INC DATE		AG DATE	

NASSAU COUNTY PROPERTY

PAGE 1 of 1 4

VALUATION SUMMARY

VALUATION BY		STANDARD
Tax Group: 4	Tax Dist:	
BUILDING MARKET VALUE		1,519,837
TOTAL MARKET OB/XF VALUE		70,000
TOTAL LAND VALUE - MARKET		200,000
TOTAL MARKET VALUE		1,789,837
SOH/AGL Deduction		36,762
ASSESSED VALUE		1,753,075
TOTAL EXEMPTION VALUE	HX HB	51,411
BASE TAXABLE VALUE		1,701,664
TOTAL JUST VALUE		1,789,837
NCON VALUE		60,000
INCOME VALUE		
PREVIOUS YEAR MKT VALUE		1,648,564

PERMIT NUM	DESCRIPTION	AMT	ISSUED
SP240011672	IN GROUND SWIMMIN	187,744	10/17/2024
CO240009550	PRIVATE PROVIDER	804,882	08/16/2024
B230015414	NSFR (T) 6172 (H)	804,882	12/01/2023

SALES DATA

OFF RECORD Number	DATE	TYPE INST	Q U	V I	RSN CD	SALE PRICE
2733/795	8/20/2024	SW	Q	I	01	1,658,700
GRANTOR: FF FLORIDA RESIDENTIA						
GRANTEE: FRISCH 2014 FAMILY						
2638/584	5/10/2023	SW	U	V	30	7,893,600
GRANTOR: AMELIA NATIONAL ENTER						
GRANTEE: FF FLORIDA RESIDENT						

BUILDING NOTES

BUILDING DIMENSIONS

BAS=[YR=2025;ORIG=-20,-5] W5 W14 N2 W1 W18 N4 W15 S2 W7 S57 E18 N10 N4 E10 N6 E10 N4 E22 N29 $
FUS=[YR=2025;ORIG=50,-15] S44 W11 N2 W10 W11 N10 W5 N4 W7 S14 W8 S2 W8 N34 E22 S14 E18 N24 E20 $
FGR=[YR=2025;ORIG=-80,48] E18 E3 S24 W6 S1 W15 N25 $
FGR=[YR=2025;ORIG=-42,24] E22 S22 W22 N8 N10 N4 $
FOP=[YR=2025;ORIG=-40,-25] E20 S10 W5 S10 W14 N2 W1 N18 $
FOP=[YR=2025;ORIG=30,-25] E20 S10 W20 N10 $
FOP=[YR=2025;ORIG=29,37] W24 N4 E13 N6 E11 S10 $
FOP=[YR=2025;ORIG=-62,34] E10 N6 E10 S10 W20 N4 $
BAS=[YR=2025;ORIG=10,27] W4 N14 E7 S4 W3 S10 $
FST=[YR=2025;ORIG=-25,-15] E5 S10 W5 N10 $

EXTRA FEATURES

LN	OB/XF CODE	DESCRIPTION	BLD	CAP	L	W	UNITS	UT	Adj R	ADJ UNIT PRICE	ORIG COND	YEAR ON	YEAR ACTUAL	Q	% COND	OB/XF MKT VALUE	NOTES
1	0501	FP-AVERAGE	0	100	0	0	2.00	UT	5,000.00	5,000.00	100	2025	2024		100	10,000	
3	0860	POOL/SPA	0	100	0	0	1.00	UT	60,000.00	60,000.00	100	2026	2025	05	100	60,000	

LAND DESCRIPTION

TOTAL OB/XF 70,000

LN	USE CODE	CLS	LAND USE DESCRIPTION	CAP	RD	LOC ZONE	FRONT	DEPTH	TOT LND UTS	UNIT TYPE	DT	DPTH FACT	% COND	TOT ADJ	UNIT PRICE	ADJ UNIT PRICE	LAND VALUE	OTHER ADJUSTMENTS AND NOTES	YEAR	DENSITY	DECL	FRZ	YR	CONSRV
1	000134	C	RES POND	100		PUD	0.00	0.00	1.00	LT		1.00	1.00	1.00	200,000.00	200,000.00	200,000							

REVIEW DATE 07/30/2025 BY KWX Total Acres: 0.00 Total Land Value: 200,000 Market: 0 Agricultural: 0 Common: 200,000 PRINTED 07/09/2026 BY SYS