LOT 2
IN OR 2188/1807
DECL COV & RESTR OR 1458/887

HUGHES SCOTT B & TERESA J
94004 HEMLOCK CT
FERNANDINA BEACH, FL 32034

2026

26-2N-28-168P-0002-0000

BUILDING CHARACTERISTICS

ELEMENT	CD	CONSTRUCTION
Exterior Wall	16	WD FR STUC 100
Roof Structur	03	GABLE/HIP 100
Roof Cover	03	COMP SHNGL 100
Interior Wall	05	DRYWALL 100
Interior Floo	12	HARDWOOD 50
Interior Floo	14	CARPET 50
Air Condition	03	CENTRAL 100
Heating Type	04	AIR DUCTED 100
Bedrooms		3 100
Bathrooms		3.5 100
Frame	02	WOOD FRAME 100
Stories	2.	2. 100
Units		0 100
Occupancy	00	NONE 100
Quality	06	Quality Level 06
DOR CODE	0100	SINGLE FAMILY
MAP NUM		MKT AREA 04
NEIGHBORHOOD/LOC	4042.00	

AREA TYPE	TOTAL GROSS AREA	PCT OF BASE	YEAR	TOT ADJ AREA	SUBAREA MARKET VALUE
BAS	1,555	100	2016	1,555	232,496
FGR	150	55	2016	82	12,260
FGR	516	55	2016	284	42,462
FOP	36	30	2016	11	1,645
FOP	63	30	2016	19	2,841
FOP	64	30	2016	19	2,841
FOP	133	30	2016	40	5,980
FUS	951	100	2016	951	142,189
PTO	190	5	2019	10	1,496
STR	64	10	2016	6	897
TOTALS	3,722			2,977	445,105

MARKET ADJUSTMENTS

TYPE	MDL	EFF. AREA	TOT ADJ PTS	EFF. BASE RATE	REPL. COST NEW	AYB	EYB	ECON	FNCT		NORM	% COND
0320	11	2,977	149.1075	156.56	466,079	2016	2016	0	0	0	4.50	95.50

1 TOWNHOUSE 0% - 0 Heated Area: 2506 HX Base Yr

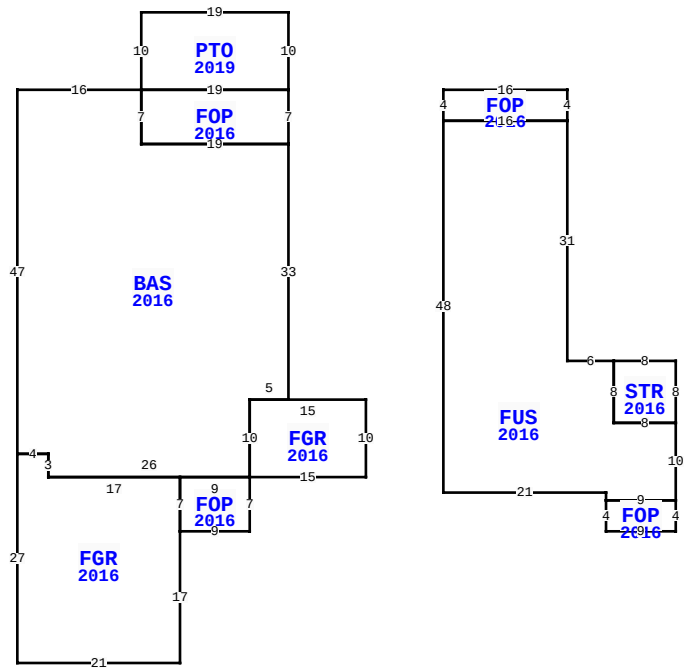

94004 HEMLOCK CT, FERNANDINA BEACH

BLD DATE	01/11/2017 KK	LGL DATE	
XF DATE		LAND DATE	05/08/2025 MLU
INC DATE		AG DATE	

NASSAU COUNTY PROPERTY

PAGE 1 of 1 4

VALUATION SUMMARY

VALUATION BY	STANDARD
Tax Group: 4	Tax Dist:
BUILDING MARKET VALUE	445,105
TOTAL MARKET OB/XF VALUE	2,531
TOTAL LAND VALUE - MARKET	120,000
TOTAL MARKET VALUE	567,636
SOH/AGL Deduction	79,851
ASSESSED VALUE	487,785
TOTAL EXEMPTION VALUE	0
BASE TAXABLE VALUE	487,785
TOTAL JUST VALUE	567,636
NCON VALUE	0
INCOME VALUE	
PREVIOUS YEAR MKT VALUE	459,043

PERMIT NUM	DESCRIPTION	AMT	ISSUED
B1809502	SCRN ENCLSRE	6,692	09/18/2018
C1531293	CO ISSUED	0	06/01/2017
B1531293	NEW CONSTR	319,919	10/01/2015

SALES DATA

OFF RECORD Number	DATE	TYPE INST	Q / U	V / I	RSN CD	SALE PRICE
2188/1807	4/04/2018	WD	Q	I	01	290,000
GRANTOR: ADVANTAGE HOME BUILDE						
GRANTEE: HUGHES SCOTT B & TE						
1976/0675	4/13/2015	SW	U	V	37	238,000
GRANTOR: PRIVATE QUARTERS ACQU						
GRANTEE: ADVANTAGE HOME BUIL						

BUILDING NOTES

BUILDING DIMENSIONS

PTO=[YR=2019] N10 W19 S10 E19$ FOP=[YR=2016] W19
BAS=[YR=2016] W16 S47 FGR=[YR=2016] S27 E21 N17
FOP=[YR=2016] E9 N7 W9 S7$ N7 W17 N3 W4$ E4 S3 E26
FGR=[YR=2016] E15 N10 W15 S10$ N10 E5 N33 W19 N7$ S7 E19 N7$
PTR=E20 FOP=[YR=2016] E16 S4 FUS=[YR=2016] S31 E6
STR=[YR=2016] E8 S8 W8 N8$ S8 E8 S10 FOP=[YR=2016] S4 W9 N4
E9$ W9 N1 W21 N48 E16$ W16 N4$ W20$.

EXTRA FEATURES

LN	OB/XF CODE	DESCRIPTION	BLD	CAP	L	W	UNITS	UT	Adj R	ADJ UNIT PRICE	ORIG COND	YEAR ON	YEAR ACTUAL	Q	% COND	OB/XF MKT VALUE	NOTES
4	0911	SCRN RM A	0	0	19	10	190.00	SF	18.00	18.00	100	2018	2018	3	74	2,531	

LAND DESCRIPTION

TOTAL OB/XF 2,531

LN	USE CODE	CLS	LAND USE DESCRIPTION	CAP	RD	LOC ZONE	FRONT	DEPTH	TOT LND UTS	UNIT TYPE	DT	DPTH FACT	% COND	TOT ADJ	UNIT PRICE	ADJ UNIT PRICE	LAND VALUE	OTHER ADJUSTMENTS AND NOTES	YEAR	DENSITY	DECL	FRZ	YR	CONSRV
1	000310	C	TOWNHOUSE	0		PUD	0.00	0.00	1.00	LT		1.00	1.00	1.00	120,000.00	120,000.00	120,000							

REVIEW DATE 01/11/2023 BY DJA Total Acres: 0.00 Total Land Value: 120,000 Market: 0 Agricultural: 0 Common: 120,000 PRINTED 07/09/2026 BY SYS