PT N1/2 OF SE1/4 OF
SEC 26-2N-24E IN OR 2493/1472

HAGAN DONALD G & ANN B L/E/
35121 KAREN RD
CALLAHAN, FL 32011

2026

26-2N-24-0000-0004-0110

BUILDING CHARACTERISTICS

ELEMENT	CD	CONSTRUCTION
Exterior Wall	20	FACE BRICK 100
Roof Structur	08	IRREGULAR 100
Roof Cover	03	COMP SHNGL 100
Interior Wall	05	DRYWALL 90
Interior Wall	06	CUST PANEL 10
Interior Floo	14	CARPET 90
Interior Floo	11	CLAY TILE 10
Air Condition	03	CENTRAL 100
Heating Type	04	AIR DUCTED 100
Bedrooms		4 100
Bathrooms		3.5 100
Frame	02	WOOD FRAME 100
Stories	2.	2. 100
Units		0 100
Occupancy	00	NONE 100
Quality	01	Quality Level 01
DOR CODE	0100	SINGLE FAMILY
MAP NUM		MKT AREA 08
NEIGHBORHOOD/LOC	8001.00	

AREA TYPE	TOTAL GROSS AREA	PCT OF BASE	YEAR	TOT ADJ AREA	SUBAREA MARKET VALUE
BAS	3,852	100	2000	3,852	481,512
FEP	450	80	2000	360	45,001
FGR	1,035	55	2000	569	71,127
FOP	63	30	2000	19	2,375
FOP	276	30	2000	83	10,376
FOP	288	30	2000	86	10,750
FST	99	55	2000	54	6,750
FST	150	55	2000	82	10,251
FUS	1,438	100	2000	1,438	179,754
TOTALS	7,651			6,543	817,896

MARKET ADJUSTMENTS

TYPE	MDL	EFF. AREA	TOT ADJ PTS	EFF. BASE RATE	REPL. COST NEW	AYB	EYB	ECON	FNCT		NORM	% COND
0500	01	6,543	92.6820	153.85	1,006,641	2000	2000	0	0	0	18.75	81.25

1 SFR CUST 100% - 2001 Heated Area: 5290 HX Base Yr 2001

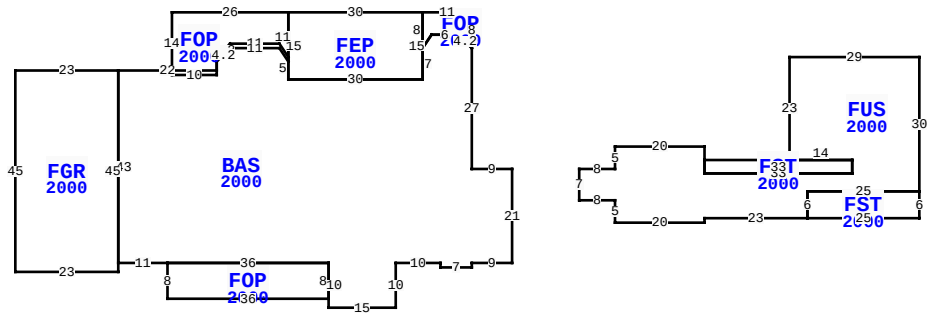

35121 KAREN RD, CALLAHAN

BLD DATE		LGL DATE	
XF DATE		LAND DATE	05/08/2026 MLU
INC DATE		AG DATE	

EXTRA FEATURES

LN	OB/XF CODE	DESCRIPTION	BLD	CAP	L	W	UNITS	UT	Adj R	ADJ UNIT PRICE	ORIG COND	YEAR ON	YEAR ACTUAL	Q	% COND	OB/XF MKT VALUE	NOTES
3	0510	GARAGE WD-	0	100	25	25	625.00	SF	35.00	35.00	100	2001	2001	3	27	5,906	

NASSAU COUNTY PROPERTY

PAGE 1 of 2 6

VALUATION SUMMARY

VALUATION BY		STANDARD
Tax Group: 6	Tax Dist:	
BUILDING MARKET VALUE		1,024,183
TOTAL MARKET OB/XF VALUE		5,906
TOTAL LAND VALUE - MARKET		124,320
TOTAL MARKET VALUE		1,154,409
SOH/AGL Deduction		638,111
ASSESSED VALUE		516,298
TOTAL EXEMPTION VALUE	HX HB	51,411
BASE TAXABLE VALUE		464,887
TOTAL JUST VALUE		1,154,409
NCON VALUE		0
INCOME VALUE		
PREVIOUS YEAR MKT VALUE		1,155,874

PERMIT NUM	DESCRIPTION	AMT	ISSUED
B006802	GARAGE	35,000	02/01/2000
B996590	NEW CONSTR	280,000	11/01/1999

SALES DATA

OFF RECORD Number	DATE	TYPE INST	Q U	V I	RSN CD	SALE PRICE
2493/1472	8/31/2021	WD	U	I	11	100
GRANTOR: HAGAN DONALD G & ANN						
GRANTEE: HAGAN DONALD W & PE						
0757/1963	4/25/1996	WD	Q	I		112,500
GRANTOR: SEARFOSS BARBARA EWIN						
GRANTEE: HAGAN DONALD & ANN						

BUILDING NOTES

BUILDING DIMENSIONS

BAS=[YR=2000] W9 N27 FOP=[YR=2000] N8 W11 FEP=[YR=2000] W30 FOP=[YR=2000] W26 S14 E10 N3 R3 U3 E11 D3 R2 N11$ S15 E30 N15$ S8 R2 U3 E6 D3 R3 $ L3 U3 W6 D3 L2 S7 W30 N5 L2 U3 W11 D3 L3 S3 W22 FGR=[YR=2000] W23 S45 E23 N45 $ S43E11 FOP=[YR=2000] S8 E36 N8 W36 $ E36 S10 E15 N10 E10 S1 E7 N1 E9 N21 $ PTR= E15 FUS=[YR=2000] E8 N5 E20 S3 FST=[YR=2000] S3 E33 N3 W33 $ S3 E33 N3 W14 N23 E29 S30 FST=[YR=2000] W25 S6 E25 N6 $ W25 S6 W23 S1 W20 N5 W8 N7 $ W15 $.

LAND DESCRIPTION

TOTAL OB/XF 5,906

LN	USE CODE	CLS	LAND USE DESCRIPTION	CAP	RD	LOC ZONE	FRONT	DEPTH	TOT LND UTS	UNIT TYPE	DT	DPTH FACT	% COND	TOT ADJ	UNIT PRICE	ADJ UNIT PRICE	LAND VALUE	OTHER ADJUSTMENTS AND NOTES	YEAR	DENSITY	DECL	FRZ	YR	CONSRV
1	000100	C	RES	100	0005	OR	0.00	0.00	4.44	AC		1.00	1.00	1.00	28,000.00	28,000.00	124,320							

REVIEW DATE 01/01/2023 BY CD Total Acres: 4.44 Total Land Value: 124,320 Market: 0 Agricultural: 0 Common: 124,320 PRINTED 07/09/2026 BY SYS

PT N1/2 OF SE1/4 OF
SEC 26-2N-24E IN OR 2493/1472

HAGAN DONALD G & ANN B L/E/
35121 KAREN RD
CALLAHAN, FL 32011

2026

26-2N-24-0000-0004-0110

BUILDING CHARACTERISTICS

ELEMENT	CD	CONSTRUCTION
Exterior Wall	05	AVERAGE 90
Exterior Wall	20	FACE BRICK 10
Roof Structur	07	GAMBREL 100
Roof Cover	03	COMP SHNGL 100
Interior Wall	05	DRYWALL 100
Interior Floo	03	CONC FINSH 100
Air Condition	03	CENTRAL 100
Heating Type	04	AIR DUCTED 100
Bedrooms		1 100
Bathrooms		1 100
Frame	02	WOOD FRAME 100
Stories	1.	1. 100
Units		0 100
Occupancy	00	NONE 100
Quality	01	Quality Level 01
DOR CODE	0100	SINGLE FAMILY
MAP NUM		MKT AREA 08
NEIGHBORHOOD/LOC	8001.00	

AREA TYPE	TOTAL GROSS AREA	PCT OF BASE	YEAR	TOT ADJ AREA	SUBAREA MARKET VALUE
BAS	407	100	2000	407	58,549
FGR	243	55	2000	134	19,276
FGR	1,550	55	2000	852	122,564
FOP	136	30	2000	41	5,898
TOTALS	2,336			1,434	206,287

MARKET ADJUSTMENTS

TYPE	MDL	EFF. AREA	TOT ADJ PTS	EFF. BASE RATE	REPL. COST NEW	AYB	EYB	ECON	FNCT		NORM	% COND
0500	01	1,434	99.4968	165.16	236,839	2000	2000	0	0	0	12.90	87.10

2 SFR CUST 100% - 2001 Heated Area: 407 HX Base Yr 2001

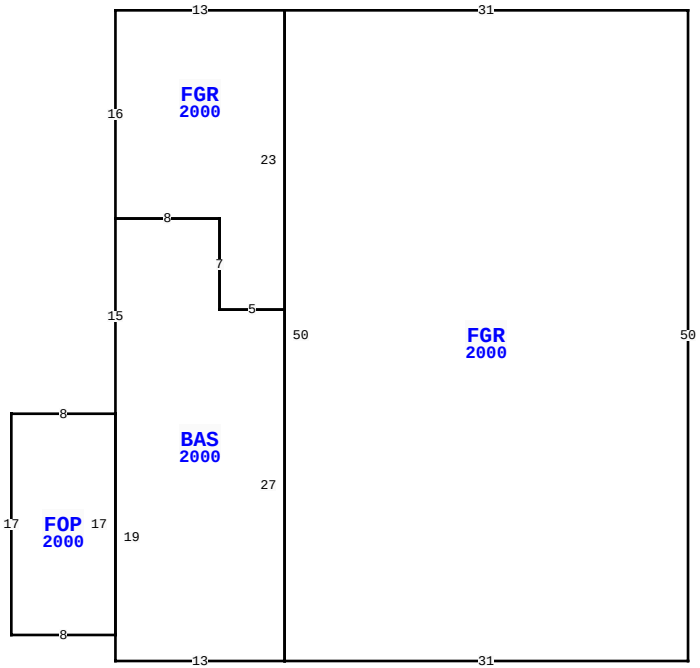

35121 KAREN RD, CALLAHAN

BLD DATE		LGL DATE	
XF DATE		LAND DATE	05/08/2026 MLU
INC DATE		AG DATE	

NASSAU COUNTY PROPERTY

PAGE 2 of 2 6

VALUATION SUMMARY

VALUATION BY		STANDARD
Tax Group: 6	Tax Dist:	
BUILDING MARKET VALUE		1,024,183
TOTAL MARKET OB/XF VALUE		5,906
TOTAL LAND VALUE - MARKET		124,320
TOTAL MARKET VALUE		1,154,409
SOH/AGL Deduction		638,111
ASSESSED VALUE		516,298
TOTAL EXEMPTION VALUE	HX HB	51,411
BASE TAXABLE VALUE		464,887
TOTAL JUST VALUE		1,154,409
NCON VALUE		0
INCOME VALUE		
PREVIOUS YEAR MKT VALUE		1,155,874

PERMIT NUM	DESCRIPTION	AMT	ISSUED

SALES DATA

OFF RECORD Number	DATE	TYPE INST	Q / U	V / I	RSN CD	SALE PRICE
2493/1472	8/31/2021	WD	U	I	11	100
GRANTOR: HAGAN DONALD G & ANN						
GRANTEE: HAGAN DONALD W & PE						
0757/1963	4/25/1996	WD	Q	I		112,500
GRANTOR: SEARFOSS BARBARA EWIN						
GRANTEE: HAGAN DONALD & ANN						

BUILDING NOTES

BUILDING DIMENSIONS

FGR=[YR=2000] W31 FGR=[YR=2000] W13 S16 BAS=[YR=2000] S15 FOP=[YR=2000] W8 S17 E8 N17 $ S19 E13 N27 W5 N7 W8 $ E8 S7 E5 N23 $ S50 E31 N50 $.

EXTRA FEATURES

L N	OB/XF CODE	DESCRIPTION	BLD	CAP	L	W	UNITS	UT	Adj R	ADJ UNIT PRICE	ORIG COND	YEAR ON	YEAR ACTUAL	Q	% COND	OB/XF MKT VALUE	NOTES

LAND DESCRIPTION

TOTAL OB/XF 0

L N	USE CODE	CLS	LAND USE DESCRIPTION	CAP	R D	LOC ZONE	FRONT	DEPTH	TOT LND UTS	UNIT TYPE	D T	DPTH FACT	% COND	TOT ADJ	UNIT PRICE	ADJ UNIT PRICE	LAND VALUE	OTHER ADJUSTMENTS AND NOTES	YEAR	DENSITY	DECL	FRZ	YR	CONSRV

REVIEW DATE 01/01/2023 BY CD Total Acres: 4.44 Total Land Value: 124,320 Market: 0 Agricultural: 0 Common: 124,320 PRINTED 07/09/2026 BY SYS