PT S1/2 OF SW1/4
IN OR 2389/462

TODD JIMMY DARRELL & DAWN M
3923 CHARLES GREEN RD
HILLIARD, FL 32046

2026

26-2N-23-0000-0005-0040

NASSAU COUNTY PROPERTY

BUILDING CHARACTERISTICS

ELEMENT	CD	CONSTRUCTION
Exterior Wall	20	FACE BRICK 70
Exterior Wall	30	VINYL 30
Roof Structur	03	GABLE/HIP 100
Roof Cover	03	COMP SHNGL 100
Interior Wall	05	DRYWALL 100
Interior Floo	14	CARPET 90
Interior Floo	11	CLAY TILE 10
Air Condition	03	CENTRAL 100
Heating Type	04	AIR DUCTED 100
Bedrooms		4 100
Bathrooms		3.5 100
Frame	02	WOOD FRAME 100
Stories	2.	2. 100
Units		0 100
Occupancy	00	NONE 100
Quality	05	Quality Level 05
DOR CODE	0100	SINGLE FAMILY
MAP NUM		MKT AREA 09
NEIGHBORHOOD/LOC	9001.00	

AREA TYPE	TOTAL GROSS AREA	PCT OF BASE	YEAR	TOT ADJ AREA	SUBAREA MARKET VALUE
BAS	1,682	100	1993	1,682	232,855
FGR	494	55	1993	272	37,655
FOP	165	30	1993	50	6,922
FUS	884	100	1993	884	122,380
USP	227	30	1993	68	9,414
TOTALS	3,452			2,956	409,228

MARKET ADJUSTMENTS

TYPE	MDL	EFF. AREA	TOT ADJ PTS	EFF. BASE RATE	REPL. COST NEW	AYB	EYB	ECON	FNCT		NORM	% COND
0900	01	2,956	114.1536	158.67	469,029	1991	2006	0	0	0	12.75	87.25

1 SNGL FAM 100% - 2021 Heated Area: 2566 HX Base Yr 2021

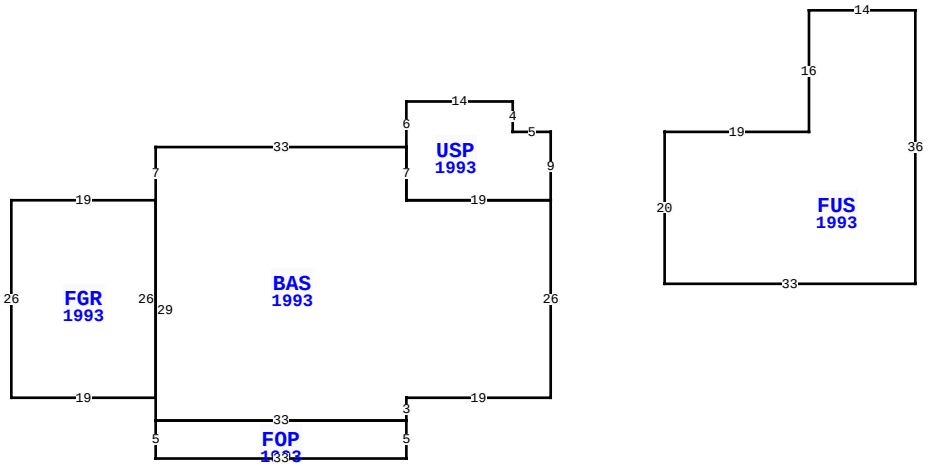

3923 CHARLES GREEN RD, HILLIARD

BLD DATE		LGL DATE	
XF DATE		LAND DATE	05/12/2026 MLU
INC DATE		AG DATE	

VALUATION SUMMARY

VALUATION BY		STANDARD
Tax Group: 6	Tax Dist:	
BUILDING MARKET VALUE		409,228
TOTAL MARKET OB/XF VALUE		6,155
TOTAL LAND VALUE - MARKET		84,000
TOTAL MARKET VALUE		499,383
SOH/AGL Deduction		182,289
ASSESSED VALUE		317,094
TOTAL EXEMPTION VALUE	HX HB VX	56,411
BASE TAXABLE VALUE		260,683
TOTAL JUST VALUE		499,383
NCON VALUE		0
INCOME VALUE		
PREVIOUS YEAR MKT VALUE		506,688

18X21 METAL CARPORT

PERMIT NUM	DESCRIPTION	AMT	ISSUED
B230009864		12,564	08/01/2023
230009864	CARPORT	12,564	08/01/2023

SALES DATA

OFF RECORD Number	DATE	TYPE INST	Q / U	V / I	RSN CD	SALE PRICE
2389/0462	8/31/2020	WD	Q	I	01	375,000

GRANTOR: GREEN ROBERT B

GRANTEE: TODD JIMMY DARRELL

BUILDING NOTES

BUILDING DIMENSIONS

USP=[YR=1993] W5 N4 W14 S6 BAS=[YR=1993] W33 S7 FGR=[YR=1993] W19 S26 E19 N26 $ S29 FOP=[YR=1993] S5 E33 N5 W33$ E33 N3 E19 N26 W19 N7$ S7 E19 N9$ PTR=E15 FUS=[YR=1993] E19 N16 E14 S36 W33 N20$ W15$.

EXTRA FEATURES

LN	OB/XF CODE	DESCRIPTION	BLD	CAP	L	W	UNITS	UT	Adj R	ADJ UNIT PRICE	ORIG COND	YEAR ON	YEAR ACTUAL	Q	% COND	OB/XF MKT VALUE	NOTES
1	0504	FP-ELECTRI	0	100	0	0	2.00	UT	2,000.00	2,000.00	100	1991	1991	3	66	2,640	
4	0351	CARPORT MT	0	100	21	18	378.00	SF	10.00	10.00	100	2024	2023		93	3,515	

LAND DESCRIPTION

TOTAL OB/XF 6,155

LN	USE CODE	CLS	LAND USE DESCRIPTION	CAP	RD	LOC ZONE	FRONT	DEPTH	TOT LND UTS	UNIT TYPE	DT	DPTH FACT	% COND	TOT ADJ	UNIT PRICE	ADJ UNIT PRICE	LAND VALUE	OTHER ADJUSTMENTS AND NOTES	YEAR	DENSITY	DECL	FRZ	YR	CONSRV
1	000100	C	RES	100		OR	0.00	0.00	3.00	AC		1.00	1.00	1.00	28,000.00	28,000.00	84,000							

REVIEW DATE 01/01/2023 BY CD Total Acres: 3.00 Total Land Value: 84,000 Market: 0 Agricultural: 0 Common: 84,000 PRINTED 07/09/2026 BY SYS