LOT 25
IN OR 2098/1325
FLORA PARKE PB 6/137-139

TSANK ALLA REVOCABLE TRUST/TSANK ALLA TRUSTEE
3697 SAGE CANYON DR
ENCINTAS, CA 92024-7918

2026

25-2N-28-0550-0025-0000

NASSAU COUNTY PROPERTY

BUILDING CHARACTERISTICS

ELEMENT	CD	CONSTRUCTION
Exterior Wall	16	WD FR STUC 100
Roof Structur	08	IRREGULAR 100
Roof Cover	03	COMP SHNGL 100
Interior Wall	05	DRYWALL 100
Interior Floo	14	CARPET 70
Interior Floo	13	LVT/LAMNT 30
Air Condition	03	CENTRAL 100
Heating Type	04	AIR DUCTED 100
Bedrooms		4 100
Bathrooms		2 100
Frame	02	WOOD FRAME 100
Stories	1.	1. 100
Units		0 100
Occupancy	00	NONE 100
Quality	01	Quality Level 01
DOR CODE	0100	SINGLE FAMILY
MAP NUM		MKT AREA 04
NEIGHBORHOOD/LOC	4041.00	

AREA TYPE	TOTAL GROSS AREA	PCT OF BASE	YEAR	TOT ADJ AREA	SUBAREA MARKET VALUE
BAS	2,138	100	2000	2,138	246,247
FGR	756	55	2000	416	47,913
FOP	68	30	2000	20	2,304
FOP	264	30	2000	79	9,099
PTO	15	5	2000	1	116
PTO	18	5	2000	1	116
TOTALS	3,259			2,655	305,793

MARKET ADJUSTMENTS

TYPE	MDL	EFF. AREA	TOT ADJ PTS	EFF. BASE RATE	REPL. COST NEW	AYB	EYB	ECON	FNCT		NORM	% COND
0900	01	2,655	94.6944	131.63	349,478	2000	2000	0	0	0	12.50	87.50

1 SNGL FAM 0% - 0 Heated Area: 2138 HX Base Yr

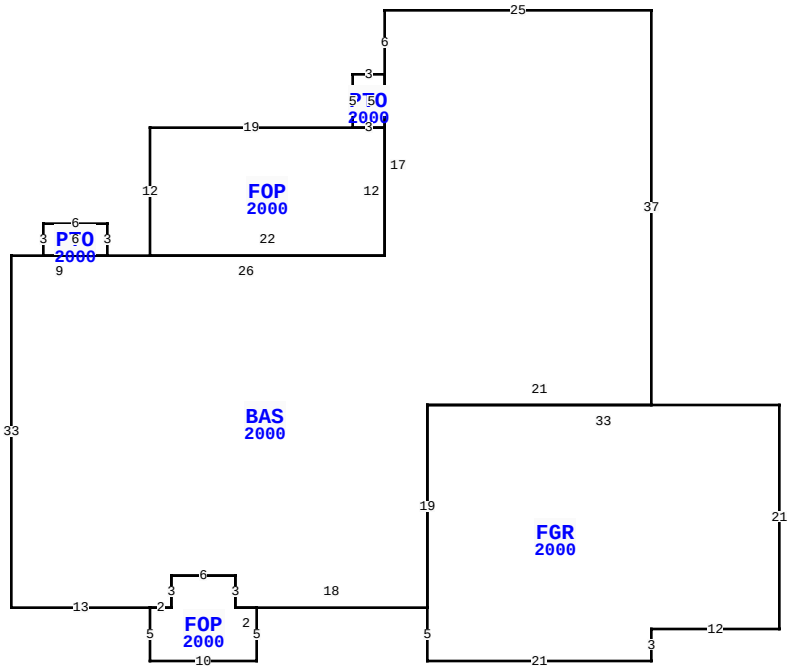

23880 FLORA PARKE BLVD, FERNANDINA BEACH

BLD DATE		LGL DATE	
XF DATE		LAND DATE	04/23/2025 MLU
INC DATE		AG DATE	

VALUATION SUMMARY

VALUATION BY	STANDARD
Tax Group: 4	Tax Dist:
BUILDING MARKET VALUE	305,793
TOTAL MARKET OB/XF VALUE	2,835
TOTAL LAND VALUE - MARKET	85,000
TOTAL MARKET VALUE	393,628
SOH/AGL Deduction	6,885
ASSESSED VALUE	386,743
TOTAL EXEMPTION VALUE	0
BASE TAXABLE VALUE	386,743
TOTAL JUST VALUE	393,628
NCON VALUE	0
INCOME VALUE	
PREVIOUS YEAR MKT VALUE	415,848

PERMIT NUM	DESCRIPTION	AMT	ISSUED
B1803273	REPAIR/RRF	13,500	04/01/2018
M1706717	H/AC	0	10/01/2017
007079	NEW CONSTR	109,664	04/01/2000

SALES DATA

OFF RECORD Number	DATE	TYPE INST	Q U	V I	RSN CD	SALE PRICE
2098/1325	1/27/2017	SW	U	I	12	189,000
GRANTOR: NRZ REO VI CORP						
GRANTEE: TSANK ALLA REVOCABL						
2098/1323	7/14/2016	QC	U	I	11	100
GRANTOR: BAC HOME LOANS SERVIC						
GRANTEE: NRZ REO VI CORP						

BUILDING NOTES

BUILDING DIMENSIONS

BAS=[YR=2000] W25 S6 PTO=[YR=2000] W3 S5 FOP=[YR=2000] W19 S12 E22 N12 W3 $ E3 N5 $ S17 W26 PTO=[YR=2000] N3 W6 S3 E6 $ W9 S33 E13 FOP=[YR=2000] S5 E10 N5 W2 N3 W6 S3 W2 $ E2 N3 E6 S3 E18 FGR=[YR=2000] S5 E21 N3 E12 N21 W33 S19 $ N19 E21 N37 $.

EXTRA FEATURES

LN	OB/XF CODE	DESCRIPTION	BLD	CAP	L	W	UNITS	UT	Adj R	ADJ UNIT PRICE	ORIG COND	YEAR ON	YEAR ACTUAL	Q	% COND	OB/XF MKT VALUE	NOTES
2	0500	FP-PRE FAB	0	0	0	0	1.00	UT	3,500.00	3,500.00	100	2000	2000	3	81	2,835	

LAND DESCRIPTION

TOTAL OB/XF 2,835

LN	USE CODE	CLS	LAND USE DESCRIPTION	CAP	RD	LOC ZONE	FRONT	DEPTH	TOT LND UTS	UNIT TYPE	DT	DPTH FACT	% COND	TOT ADJ	UNIT PRICE	ADJ UNIT PRICE	LAND VALUE	OTHER ADJUSTMENTS AND NOTES	YEAR	DENSITY	DECL	FRZ	YR	CONSRV
1	000100	C	RES	0		PUD	0.00	0.00	1.00	LT		1.00	1.00	1.00	85,000.00	85,000.00	85,000							

REVIEW DATE 01/06/2023 BY DJA Total Acres: 0.00 Total Land Value: 85,000 Market: 0 Agricultural: 0 Common: 85,000 PRINTED 07/09/2026 BY SYS