LOT 1282
TOWN OF CRAWFORD
ESMT IN OR 2553-1424

LONG CALVIN DAVID & HEIDI A
428 JAX ESTATES DRIVE NORTH
JACKSONVILLE, FL 32218

2026

23-1N-24-2180-1282-0000

NASSAU COUNTY PROPERTY

BUILDING CHARACTERISTICS

ELEMENT	CD	CONSTRUCTION
Exterior Wall	31	HARDIE BRD 100
Roof Structur	03	GABLE/HIP 100
Roof Cover	03	COMP SHNGL 100
Interior Wall	05	DRYWALL 100
Interior Floo	13	LVT/LAMNT 100
Air Condition	03	CENTRAL 100
Heating Type	04	AIR DUCTED 100
Bedrooms		4 100
Bathrooms		3 100
Frame	02	WOOD FRAME 100
Stories	1.	1. 100
Units		0 100
Quality	03	Quality Level 03

DOR CODE	0100	SINGLE FAMILY	
MAP NUM		MKT AREA	08
NEIGHBORHOOD/LOC	8005.00		

AREA TYPE	TOTAL GROSS AREA	PCT OF BASE	YEAR	TOT ADJ AREA	SUBAREA MARKET VALUE
BAS	2,384	100	2026	2,384	356,289
FGR	504	55	2026	277	41,398
FOP	132	30	2026	40	5,978
FOP	272	30	2026	82	12,255
TOTALS	3,292			2,783	415,919

MARKET ADJUSTMENTS

TYPE	MDL	EFF. AREA	TOT ADJ PTS	EFF. BASE RATE	REPL. COST NEW	AYB	EYB	ECON	FNCT		NORM	% COND
0900	01	2,783	107.5200	149.45	415,919	2025	2025	0	0	0	0.00	100.00

1 SNGL FAM 0% - 2026 Heated Area: 2384 HX Base Yr

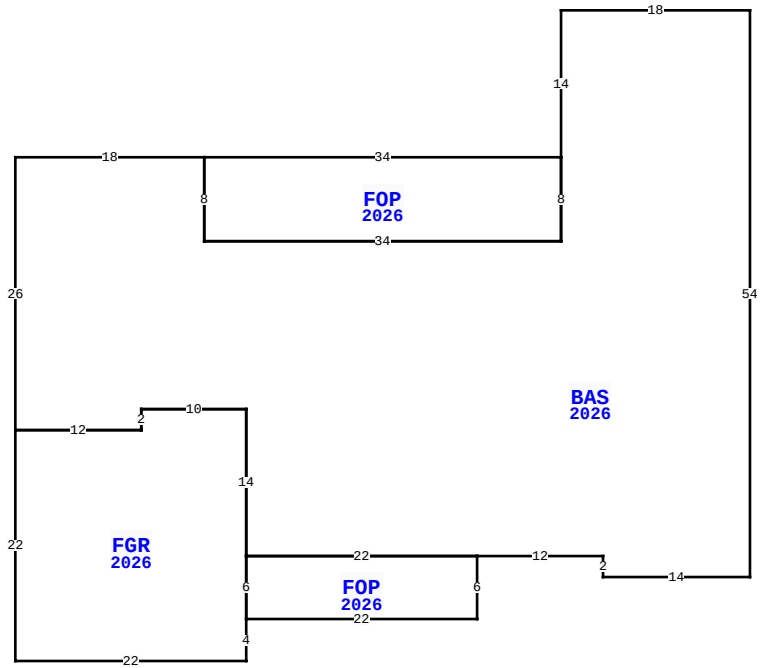

34000 BREADCRUMB TR, CALLAHAN

BLD DATE		LGL DATE	
XF DATE		LAND DATE	05/08/2026 MLU
INC DATE		AG DATE	

VALUATION SUMMARY

VALUATION BY	STANDARD
Tax Group: 6	Tax Dist:
BUILDING MARKET VALUE	476,730
TOTAL MARKET OB/XF VALUE	0
TOTAL LAND VALUE - MARKET	190,000
TOTAL MARKET VALUE	666,730
SOH/AGL Deduction	72,675
ASSESSED VALUE	594,055
TOTAL EXEMPTION VALUE	0
BASE TAXABLE VALUE	594,055
TOTAL JUST VALUE	666,730
NCON VALUE	0
INCOME VALUE	
PREVIOUS YEAR MKT VALUE	242,584

PERMIT NUM	DESCRIPTION	AMT	ISSUED
CO250003661	NSFR - (T)3309(H)	742,330	04/09/2025
22009566	NEW CONSTR	123,053	06/22/2022
22009568	NEW CONSTR	742,330	06/22/2022

SALES DATA

OFF RECORD Number	DATE	TYPE INST	Q / U	V / I	RSN CD	SALE PRICE
2454/1301	4/14/2021	WD	Q	V	01	87,000

GRANTOR: CAPPS LIVING TRUST
GRANTEE: LONG CALVIN DAVID &

BUILDING NOTES

BUILDING DIMENSIONS

BAS=[YR=2026;ORIG=170,6] W18 S14 S8 W34 N8 W18 S26 E12 N2 E10 S14 E22 E12 S2 E14 N54 $
FOP=[YR=2026;ORIG=118,20] E34 S8 W34 N8 $
FOP=[YR=2026;ORIG=122,58] E22 S6 W22 N6 $
FGR=[YR=2026;ORIG=122,44] W10 S2 W12 S22 E22 N4 N6 N14 $
.

EXTRA FEATURES

LN	OB/XF CODE	DESCRIPTION	BLD	CAP	L	W	UNITS	UT	Adj R	ADJ UNIT PRICE	ORIG COND	YEAR ON	YEAR ACTUAL	Q	% COND	OB/XF MKT VALUE	NOTES

LAND DESCRIPTION

TOTAL OB/XF 0

LN	USE CODE	CLS	LAND USE DESCRIPTION	CAP	RD	LOC ZONE	FRONT	DEPTH	TOT LND UTS	UNIT TYPE	DT	DPTH FACT	% COND	TOT ADJ	UNIT PRICE	ADJ UNIT PRICE	LAND VALUE	OTHER ADJUSTMENTS AND NOTES	YEAR	DENSITY	DECL	FRZ	YR	CONSRV
1	000100	C	RES	0		OR	0.00	0.00	10.00	AC		1.00	1.00	1.00	19,000.00	19,000.00	190,000							

REVIEW DATE 07/02/2025 BY WW Total Acres: 10.00 Total Land Value: 190,000 Market: 0 Agricultural: 0 Common: 190,000 PRINTED 07/09/2026 BY SYS

LOT 1282
TOWN OF CRAWFORD
ESMT IN OR 2553-1424

LONG CALVIN DAVID & HEIDI A
428 JAX ESTATES DRIVE NORTH
JACKSONVILLE, FL 32218

2026

23-1N-24-2180-1282-0000

BUILDING CHARACTERISTICS

ELEMENT	CD	CONSTRUCTION
Exterior Wall	31	HARDIE BRD 100
Roof Structur	03	GABLE/HIP 100
Roof Cover	03	COMP SHNGL 100
Interior Wall	05	DRYWALL 100
Interior Floo	13	LVT/LAMNT 100
Air Condition	03	CENTRAL 100
Heating Type	04	AIR DUCTED 100
Bedrooms		1 100
Bathrooms		1.5 100
Frame	02	WOOD FRAME 100
Stories	1.	1. 100
Units		0 100
Occupancy	00	NONE 100
Quality	04	Quality Level 04

DOR CODE	0100	SINGLE FAMILY	
MAP NUM		MKT AREA	08
NEIGHBORHOOD/LOC	8005.00		

AREA TYPE	TOTAL GROSS AREA	PCT OF BASE	YEAR	TOT ADJ AREA	SUBAREA MARKET VALUE
BAS	810	100	2022	810	59,132
FOP	78	30	2022	23	1,679
TOTALS	888			833	60,811

MARKET ADJUSTMENTS

TYPE	MDL	EFF. AREA	TOT ADJ PTS	EFF. BASE RATE	REPL. COST NEW	AYB	EYB	ECON	FNCT		NORM	% COND
0150	01	833	131.6700	73.74	61,425	2022	2022	0	0	0	1.00	99.00

2 ACCESORY U 0% - 0 Heated Area: 810 HX Base Yr

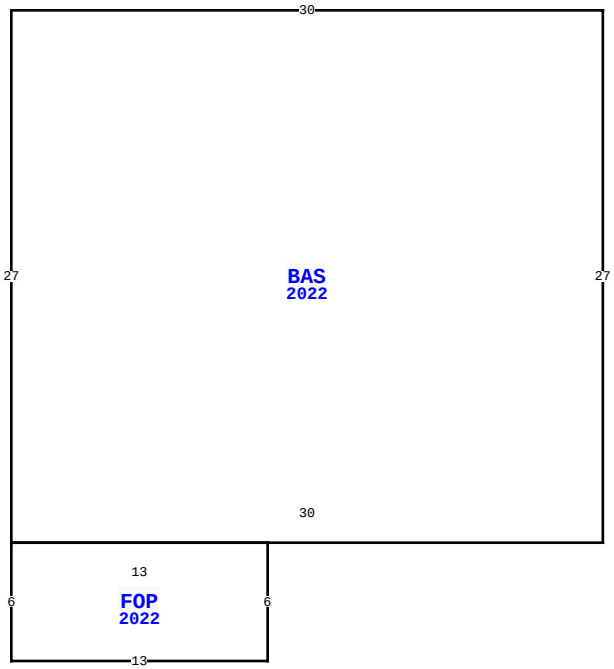

34000 BREADCRUMB TR, CALLAHAN

BLD DATE		LGL DATE	
XF DATE		LAND DATE	05/08/2026 MLU
INC DATE		AG DATE	

NASSAU COUNTY PROPERTY

PAGE 2 of 2 6

VALUATION SUMMARY

VALUATION BY	STANDARD
Tax Group: 6	Tax Dist:
BUILDING MARKET VALUE	476,730
TOTAL MARKET OB/XF VALUE	0
TOTAL LAND VALUE - MARKET	190,000
TOTAL MARKET VALUE	666,730
SOH/AGL Deduction	72,675
ASSESSED VALUE	594,055
TOTAL EXEMPTION VALUE	0
BASE TAXABLE VALUE	594,055
TOTAL JUST VALUE	666,730
NCON VALUE	0
INCOME VALUE	
PREVIOUS YEAR MKT VALUE	242,584

PERMIT NUM	DESCRIPTION	AMT	ISSUED

SALES DATA

OFF RECORD Number	DATE	TYPE INST	Q / U	V / I	RSN CD	SALE PRICE
2454/1301	4/14/2021	WD	Q	V	01	87,000

GRANTOR: CAPPS LIVING TRUST
GRANTEE: LONG CALVIN DAVID &

BUILDING NOTES

BUILDING DIMENSIONS

BAS=[YR=2022] W30 S27 FOP=[YR=2022] S6 E13 N6 W13$ E30 N27$.

EXTRA FEATURES

L N	OB/XF CODE	DESCRIPTION	BLD	CAP	L	W	UNITS	UT	Adj R	ADJ UNIT PRICE	ORIG COND	YEAR ON	YEAR ACTUAL	Q	% COND	OB/XF MKT VALUE	NOTES

LAND DESCRIPTION

TOTAL OB/XF 0

L N	USE CODE	CLS	LAND USE DESCRIPTION	CAP	R D	LOC ZONE	FRONT	DEPTH	TOT LND UTS	UNIT TYPE	D T	DPTH FACT	% COND	TOT ADJ	UNIT PRICE	ADJ UNIT PRICE	LAND VALUE	OTHER ADJUSTMENTS AND NOTES	YEAR	DENSITY	DECL	FRZ	YR	CONSRV

REVIEW DATE 07/02/2025 BY WW Total Acres: 10.00 Total Land Value: 190,000 Market: 0 Agricultural: 0 Common: 190,000 PRINTED 07/09/2026 BY SYS