LOT 4
NORTH DEERWOOD EST PB 6/173

BRENNAN CHRISTIAN & DIANA
45176 AMERICAN DREAM DRIVE
CALLAHAN, FL 32011

2026

22-2N-25-1460-0004-0000

BUILDING CHARACTERISTICS

ELEMENT	CD	CONSTRUCTION
Exterior Wall	20	FACE BRICK 50
Exterior Wall	30	VINYL 50
Roof Structur	03	GABLE/HIP 100
Roof Cover	03	COMP SHNGL 100
Interior Wall	05	DRYWALL 100
Interior Floo	13	LVT/LAMNT 70
Interior Floo	11	CLAY TILE 30
Air Condition	03	CENTRAL 100
Heating Type	04	AIR DUCTED 100
Bedrooms		4 100
Bathrooms		3.5 100
Frame	02	WOOD FRAME 100
Stories	2.	2. 100
Units		0 100
Occupancy	00	NONE 100
Quality	05	Quality Level 05

DOR CODE	0100	SINGLE FAMILY	
MAP NUM		MKT AREA	08
NEIGHBORHOOD/LOC	8018.00		

AREA TYPE	TOTAL GROSS AREA	PCT OF BASE	YEAR	TOT ADJ AREA	SUBAREA MARKET VALUE
BAS	1,183	100	2001	1,183	159,776
BAS	850	100	2010	850	114,801
FGR	581	55	2001	320	43,219
FOP	48	30	2001	14	1,891
FUS	965	100	2001	965	130,333
UOP	180	20	2001	36	4,862
UOP	316	20	2003	63	8,509
TOTALS	4,123			3,431	463,391

MARKET ADJUSTMENTS

TYPE	MDL	EFF. AREA	TOT ADJ PTS	EFF. BASE RATE	REPL. COST NEW	AYB	EYB	ECON	FNCT		NORM	% COND
0900	01	3,431	114.1536	158.67	544,397	2001	2001	0	0	0	14.88	85.12

1 SNGL FAM 100% - 2022 Heated Area: 2998 HX Base Yr 2022

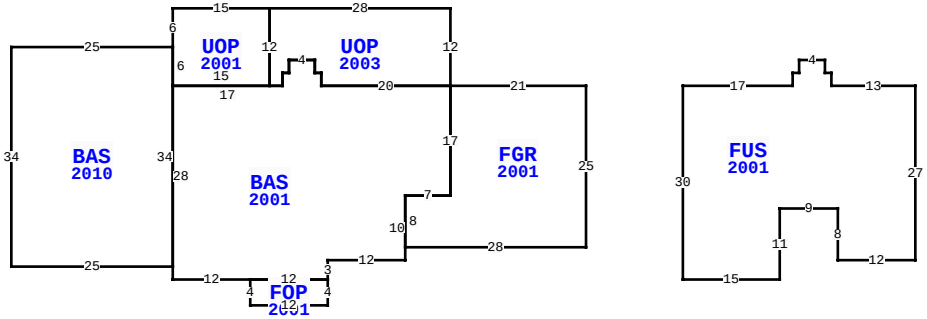

45176 AMERICAN DREAM DR, CALLAHAN

BLD DATE		LGL DATE	
XF DATE		LAND DATE	05/04/2026 MLU
INC DATE		AG DATE	

EXTRA FEATURES

LN	OB/XF CODE	DESCRIPTION	BLD	CAP	L	W	UNITS	UT	Adj R	ADJ UNIT PRICE	ORIG COND	YEAR ON	YEAR ACTUAL	Q	% COND	OB/XF MKT VALUE	NOTES
1	0500	FP-PRE FAB	0	100	0	0	1.00	UT	3,500.00	3,500.00	100	2001	2001	3	83	2,905	
4	0860	POOL/SPA	0	100	0	0	1.00	UT	50,000.00	50,000.00	100	2003	2003	04	85	42,500	

NASSAU COUNTY PROPERTY

PAGE 1 of 2 6

VALUATION SUMMARY

VALUATION BY		STANDARD
Tax Group: 6	Tax Dist:	
BUILDING MARKET VALUE		485,913
TOTAL MARKET OB/XF VALUE		45,405
TOTAL LAND VALUE - MARKET		61,000
TOTAL MARKET VALUE		592,318
SOH/AGL Deduction		118,277
ASSESSED VALUE		474,041
TOTAL EXEMPTION VALUE	HX HB	51,411
BASE TAXABLE VALUE		422,630
TOTAL JUST VALUE		592,318
NCON VALUE		0
INCOME VALUE		
PREVIOUS YEAR MKT VALUE		598,242

PERMIT NUM	DESCRIPTION	AMT	ISSUED
G01526	GAS	3,000	05/01/2010
E22332	ELEC OTHER	0	01/01/2010
B23031	ADDITION	55,902	11/01/2009
R12189	REPAIR/RRF	2,000	11/01/2009
R12190	REPAIR/RRF	1,000	11/01/2009
M14942	H/AC	0	11/01/2009

SALES DATA

OFF RECORD Number	DATE	TYPE INST	Q U	V I	RSN CD	SALE PRICE
2455/0716	4/20/2021	WD	Q	I	01	520,000
GRANTOR: TOY GEORGETTE C & BLA						
GRANTEE: BRENNAN CHRISTIAN &						
1280/1197	12/13/2004	CT	U	I	14	184,700
GRANTOR: CLERK OF COURT						
GRANTEE: TOY GEORGETTE C & S						

BUILDING NOTES

BUILDING DIMENSIONS

FGR=[YR=2001] W21 UOP=[YR=2003] N12 W28 UOP=[YR=2001] W15 S6 BAS=[YR=2010] W25 S34 E25 BAS=[YR=2001] S2 E12 FOP=[YR=2001] S4 E12 N4 W12 $ E12 N3 E12 N10 E7 N17 W20 N2 W1 N2 W4 S2 W1 S2 W17 S28$ N34$ S6 E15 N12$ S12 E2 N2 E1 N2 E4 S2 E1 S2 E20$S17 W7 S8 E28 N25 $ PTR= E15 FUS=[YR=2001] E17 N2 E1 N2 E4 S2E1 S2 E13 S27 W12 N8 W9 S11 W15 N30 $ W15 $.

LAND DESCRIPTION

TOTAL OB/XF 45,405

LN	USE CODE	CLS	LAND USE DESCRIPTION	CAP	RD	LOC ZONE	FRONT	DEPTH	TOT LND UTS	UNIT TYPE	DT	DPTH FACT	% COND	TOT ADJ	UNIT PRICE	ADJ UNIT PRICE	LAND VALUE	OTHER ADJUSTMENTS AND NOTES	YEAR	DENSITY	DECL	FRZ	YR	CONSRV
1	000100	C	RES	100	0006	OR	0.00	0.00	1.00	LT		1.00	1.00	1.00	61,000.00	61,000.00	61,000							

REVIEW DATE 01/01/2023 BY CD Total Acres: 0.00 Total Land Value: 61,000 Market: 0 Agricultural: 0 Common: 61,000 PRINTED 07/09/2026 BY SYS

LOT 4
NORTH DEERWOOD EST PB 6/173

BRENNAN CHRISTIAN & DIANA
45176 AMERICAN DREAM DRIVE
CALLAHAN, FL 32011

2026

22-2N-25-1460-0004-0000

BUILDING CHARACTERISTICS

ELEMENT	CD	CONSTRUCTION
Exterior Wall	05	AVERAGE 50
Exterior Wall	20	FACE BRICK 50
Roof Structur	03	GABLE/HIP 100
Roof Cover	03	COMP SHNGL 100
Interior Wall	07	NONE 100
Interior Floo	03	CONC FINSH 100
Air Condition	01	NONE 100
Heating Type	01	NONE 100
Bedrooms		0 100
Bathrooms		0 100
Frame	02	WOOD FRAME 100
Stories	0	0 100
Units		0 100
Occupancy	00	NONE 100
Quality	06	Quality Level 06

DOR CODE	0100	SINGLE FAMILY	
MAP NUM		MKT AREA	08
NEIGHBORHOOD/LOC	8018.00		

AREA TYPE	TOTAL GROSS AREA	PCT OF BASE	YEAR	TOT ADJ AREA	SUBAREA MARKET VALUE
BAS	1,150	100	2010	1,150	22,522
TOTALS	1,150			1,150	22,522

MARKET ADJUSTMENTS

TYPE	MDL	EFF. AREA	TOT ADJ PTS	EFF. BASE RATE	REPL. COST NEW	AYB	EYB	ECON	FNCT		NORM	% COND
6500	01	1,150	62.7785	24.48	28,152	2010	2010	0	0	0	20.00	80.00

2 GARAGE RES 100% - 2022 Heated Area: 1150 HX Base Yr 2022

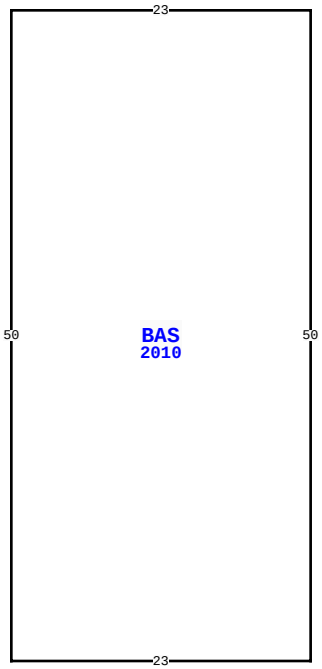

45176 AMERICAN DREAM DR, CALLAHAN

BLD DATE		LGL DATE	
XF DATE		LAND DATE	05/04/2026 MLU
INC DATE		AG DATE	

NASSAU COUNTY PROPERTY

PAGE 2 of 2 6

VALUATION SUMMARY

VALUATION BY		STANDARD
Tax Group: 6	Tax Dist:	
BUILDING MARKET VALUE		485,913
TOTAL MARKET OB/XF VALUE		45,405
TOTAL LAND VALUE - MARKET		61,000
TOTAL MARKET VALUE		592,318
SOH/AGL Deduction		118,277
ASSESSED VALUE		474,041
TOTAL EXEMPTION VALUE	HX HB	51,411
BASE TAXABLE VALUE		422,630
TOTAL JUST VALUE		592,318
NCON VALUE		0
INCOME VALUE		
PREVIOUS YEAR MKT VALUE		598,242

PERMIT NUM	DESCRIPTION	AMT	ISSUED
B	SWIM POOL	0	02/01/2003
B10720	XFOB	11,181	02/01/2003
B018553	NEW CONSTR	98,543	07/01/2001

SALES DATA

OFF RECORD Number	DATE	TYPE INST	Q / U	V / I	RSN CD	SALE PRICE
2455/0716	4/20/2021	WD	Q	I	01	520,000
GRANTOR: TOY GEORGETTE C & BLA						
GRANTEE: BRENNAN CHRISTIAN &						
1280/1197	12/13/2004	CT	U	I	14	184,700
GRANTOR: CLERK OF COURT						
GRANTEE: TOY GEORGETTE C & S						

BUILDING NOTES

BUILDING DIMENSIONS

BAS=[YR=2010] W23 S50 E23 N50$.

EXTRA FEATURES

L N	OB/XF CODE	DESCRIPTION	BLD	CAP	L	W	UNITS	UT	Adj R	ADJ UNIT PRICE	ORIG COND	YEAR ON	YEAR ACTUAL	Q	% COND	OB/XF MKT VALUE	NOTES

LAND DESCRIPTION

TOTAL OB/XF 0

L N	USE CODE	CLS	LAND USE DESCRIPTION	CAP	R D	LOC ZONE	FRONT	DEPTH	TOT LND UTS	UNIT TYPE	D T	DPTH FACT	% COND	TOT ADJ	UNIT PRICE	ADJ UNIT PRICE	LAND VALUE	OTHER ADJUSTMENTS AND NOTES	YEAR	DENSITY	DECL	FRZ	YR	CONSRV

REVIEW DATE 01/01/2023 BY CD Total Acres: 0.00 Total Land Value: 61,000 Market: 0 Agricultural: 0 Common: 61,000 PRINTED 07/09/2026 BY SYS