IN OR 2426/1689
CVNTS & RSTRTNS PT 851/1113

IRWIN CHAD DAVID & ANDREA GABRIELLE
2134-A FIRST AVE
FERNANDINA BEACH, FL 32034

2026

20-3N-29-0000-0014-0180

NASSAU COUNTY PROPERTY

BUILDING CHARACTERISTICS

ELEMENT	CD	CONSTRUCTION
Exterior Wall	10	ABOVE AVG 70
Exterior Wall	05	AVERAGE 30
Roof Structur	03	GABLE/HIP 100
Roof Cover	03	COMP SHNGL 100
Interior Wall	05	DRYWALL 100
Interior Floo	12	HARDWOOD 70
Interior Floo	14	CARPET 30
Air Condition	03	CENTRAL 100
Heating Type	04	AIR DUCTED 100
Bedrooms		3 100
Bathrooms		2 100
Frame	02	WOOD FRAME 100
Stories	2.	2. 100
Units		0 100
Quality	03	Quality Level 03
DOR CODE	0100	SINGLE FAMILY
MAP NUM		MKT AREA 01
NEIGHBORHOOD/LOC	1043.00	

AREA TYPE	TOTAL GROSS AREA	PCT OF BASE	YEAR	TOT ADJ AREA	SUBAREA MARKET VALUE
BAS	580	100	1998	580	103,075
FGR	299	55	1998	164	29,145
FOP	28	30	1998	8	1,422
FUS	950	100	1998	950	168,830
PTO	32	5	1998	2	355
PTO	112	5	1998	6	1,066
UOP	49	20	1998	10	1,777
UOP	96	20	1998	19	3,377
TOTALS	2,146			1,739	309,047

MARKET ADJUSTMENTS

TYPE	MDL	EFF. AREA	TOT ADJ PTS	EFF. BASE RATE	REPL. COST NEW	AYB	EYB	ECON	FNCT		NORM	% COND
0320	12	1,739	191.4200	200.99	349,522	1998	2001	0	0	0	11.58	88.42

1 TOWNHOUSE 100% - 2003 Heated Area: 1530 HX Base Yr 2003

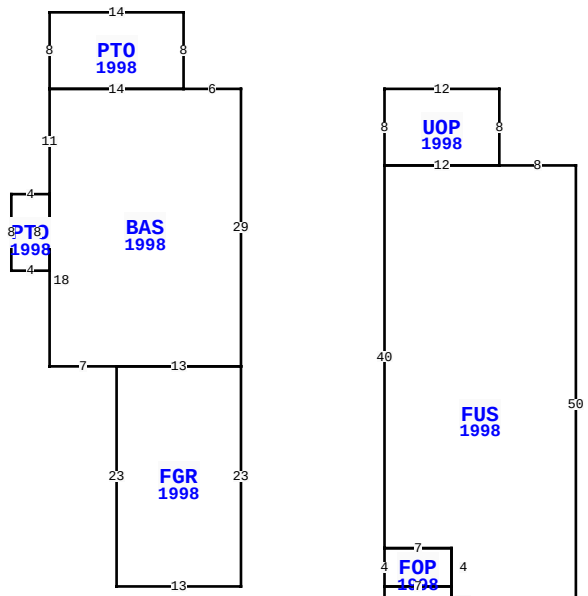

BLD DATE		LGL DATE	
XF DATE		LAND DATE	05/08/2025 MLU
INC DATE		AG DATE	

2134 1ST AV A, FERNANDINA BEACH

VALUATION SUMMARY

VALUATION BY		STANDARD
Tax Group: 2	Tax Dist:	
BUILDING MARKET VALUE		309,047
TOTAL MARKET OB/XF VALUE		0
TOTAL LAND VALUE - MARKET		168,000
TOTAL MARKET VALUE		477,047
SOH/AGL Deduction		309,258
ASSESSED VALUE		167,789
TOTAL EXEMPTION VALUE	HX HB	51,411
BASE TAXABLE VALUE		116,378
TOTAL JUST VALUE		477,047
NCON VALUE		0
INCOME VALUE		
PREVIOUS YEAR MKT VALUE		467,098

PERMIT NUM	DESCRIPTION	AMT	ISSUED
20081001	ADDITION	980	06/10/2008
20081003	XFOB	2,138	06/10/2008

SALES DATA

OFF RECORD Number	DATE	TYPE INST	Q U	V I	RSN CD	SALE PRICE
2426/1689	7/13/2020	QC	U	I	11	100
GRANTOR: IRWIN CHAD DAVID & AN						
GRANTEE: IRWIN ANDREA G & CH						
2367/1733	5/28/2020	WD	U	I	11	100
GRANTOR: IRWIN CHAD						
GRANTEE: IRWIN CHAD DAVID &						

BUILDING NOTES

BUILDING DIMENSIONS

BAS=[YR=1998] W6 PTO=[YR=1998] N8 W14 S8 E14$ W14 S11 PTO=[YR=1998] W4 S8 E4 N8$ S18 E7 FGR=[YR=1998] S23 E13 N23 W13$ E13 N29$ PTR=E15 UOP=[YR=1998] E12 S8 FUS=[YR=1998] E8 S50 W3 S2 W10 N1 UOP=[YR=1998] W7 N7 FOP=[YR=1998] N4 E7 S4W7$ E7 S7$ N11 W7 N40 E12$ W12 N8$ W15$.

EXTRA FEATURES

LN	OB/XF CODE	DESCRIPTION	BLD	CAP	L	W	UNITS	UT	Adj R	ADJ UNIT PRICE	ORIG COND	YEAR ON	YEAR ACTUAL	Q	% COND	OB/XF MKT VALUE	NOTES

LAND DESCRIPTION

TOTAL OB/XF 0

LN	USE CODE	CLS	LAND USE DESCRIPTION	CAP	RD	LOC ZONE	FRONT	DEPTH	TOT LND UTS	UNIT TYPE	DT	DPTH FACT	% COND	TOT ADJ	UNIT PRICE	ADJ UNIT PRICE	LAND VALUE	OTHER ADJUSTMENTS AND NOTES	YEAR	DENSITY	DECL	FRZ	YR	CONSRV
1	000310	C	TOWNHOUSE	100		R-2	28.00	131.00	28.00	FF		1.00	1.00	1.00	6,000.00	6,000.00	168,000							

REVIEW DATE 01/01/2023 BY CD Total Acres: 0.00 Total Land Value: 168,000 Market: 0 Agricultural: 0 Common: 168,000 PRINTED 07/09/2026 BY SYS