PT SEC 20-3N-29E
IN OR 1975/388
CVNTS & RSTRTNS PT OR 851/1121

ST PIERRE LAURA N
2154 1ST AVE APT A
FERNANDINA BEACH, FL 32034

2026

20-3N-29-0000-0014-0120

BUILDING CHARACTERISTICS

ELEMENT	CD	CONSTRUCTION
Exterior Wall	10	ABOVE AVG 70
Exterior Wall	05	AVERAGE 30
Roof Structur	03	GABLE/HIP 100
Roof Cover	03	COMP SHNGL 100
Interior Wall	05	DRYWALL 100
Interior Floo	14	CARPET 80
Interior Floo	08	SHT VINYL 20
Air Condition	03	CENTRAL 100
Heating Type	04	AIR DUCTED 100
Bedrooms		3 100
Bathrooms		2 100
Frame	02	WOOD FRAME 100
Stories	2.	2. 100
Units		0 100
Quality	03	Quality Level 03
DOR CODE	0100	SINGLE FAMILY
MAP NUM		MKT AREA 01
NEIGHBORHOOD/LOC	1043.00	

AREA TYPE	TOTAL GROSS AREA	PCT OF BASE	YEAR	TOT ADJ AREA	SUBAREA MARKET VALUE
BAL	112	15	2009	17	2,827
BAS	587	100	1998	587	97,593
BAS	168	100	2009	168	27,931
FGR	299	55	1998	164	27,266
FOP	28	30	1998	8	1,330
FOP	28	30	2009	8	1,330
FOP	56	30	2009	17	2,827
FUS	950	100	1998	950	157,944
PTO	112	5	2009	6	998
STR	49	10	2009	5	832
TOTALS	2,501			1,980	329,188

MARKET ADJUSTMENTS

TYPE	MDL	EFF. AREA	TOT ADJ PTS	EFF. BASE RATE	REPL. COST NEW	AYB	EYB	ECON	FNCT		NORM	% COND
0320	12	1,980	180.0946	189.10	374,418	1998	2000	0	0	0	12.08	87.92

1 TOWNHOUSE 100% - 2016 Heated Area: 1705 HX Base Yr 2016

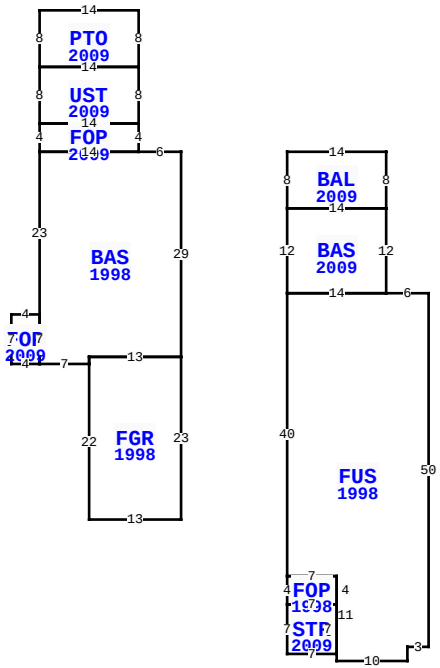

** This building has 11 Sub-Areas

2154 1ST AV A, FERNANDINA BEACH

BLD DATE	12/09/2009 DJ	LGL DATE	
XF DATE		LAND DATE	05/08/2025 MLU
INC DATE		AG DATE	

NASSAU COUNTY PROPERTY

PAGE 1 of 1 2

VALUATION SUMMARY

VALUATION BY		STANDARD
Tax Group: 2	Tax Dist:	
BUILDING MARKET VALUE		329,188
TOTAL MARKET OB/XF VALUE		0
TOTAL LAND VALUE - MARKET		168,000
TOTAL MARKET VALUE		497,188
SOH/AGL Deduction		264,562
ASSESSED VALUE		232,626
TOTAL EXEMPTION VALUE	HX HB	51,411
BASE TAXABLE VALUE		181,215
TOTAL JUST VALUE		497,188
NCON VALUE		0
INCOME VALUE		
PREVIOUS YEAR MKT VALUE		486,332

PERMIT NUM	DESCRIPTION	AMT	ISSUED
20090217	ELEC OTHER	800	02/18/2009
20090116	XFOB	20,000	01/26/2009

SALES DATA

OFF RECORD Number	DATE	TYPE INST	Q U	V I	RSN CD	SALE PRICE
1975/0388	4/15/2015	WD	Q	I	01	239,000
GRANTOR: GRAY KATHLEEN M TRUST						
GRANTEE: ST PIERRE LAURA N						
1938/0608	9/16/2014	QC	U	I	11	79,500
GRANTOR: STRICKLAND ANN R						
GRANTEE: ROBAS VICTORIA B						

BUILDING NOTES

BUILDING DIMENSIONS

BAS=[YR=1998] W6 FOP=[YR=2009] N4 UST=[YR=2009] N8
PTO=[YR=2009] N8 W14 S8 E14 $ W14 S8 E14 $ W14 S4 E14 $ W14
S23 FOP=[YR=2009] W4 S7 E4 N7 $ S7 E7 FGR=[YR=1998] S22 E13
N23 W13 S1$ N1 E13 N29 $ PTR= E15 BAL=[YR=2009] E14 S8
BAS=[YR=2009] S12 FUS=[YR=1998] E6 S50 W3 S2 W10 N1
STR=[YR=2009] W7 N7 FOP=[YR=1998] N4 E7 S4 W7 $ E7 S7 $ N11
W7 N40 E14 $ W14 N12 E14 $ W14 N8 $ W15 $.

EXTRA FEATURES

LN	OB/XF CODE	DESCRIPTION	BLD	CAP	L	W	UNITS	UT	Adj R	ADJ UNIT PRICE	ORIG COND	YEAR ON	YEAR ACTUAL	Q	% COND	OB/XF MKT VALUE	NOTES

LAND DESCRIPTION

TOTAL OB/XF 0

LN	USE CODE	CLS	LAND USE DESCRIPTION	CAP	RD	LOC ZONE	FRONT	DEPTH	TOT LND UTS	UNIT TYPE	DT	DPTH FACT	% COND	TOT ADJ	UNIT PRICE	ADJ UNIT PRICE	LAND VALUE	OTHER ADJUSTMENTS AND NOTES	YEAR	DENSITY	DECL	FRZ	YR	CONSRV
1	000100	C	RES	100		R-2	28.00	129.00	28.00	FF		1.00	1.00	1.00	6,000.00	6,000.00	168,000							

REVIEW DATE 01/01/2023 BY CD Total Acres: 0.00 Total Land Value: 168,000 Market: 0 Agricultural: 0 Common: 168,000 PRINTED 07/09/2026 BY SYS