PT OR 1953/879
CLUB HOUSE FOR OSPREY VILLAGE

NHI-REIT OF SEASIDE LLC
222 ROBERT ROSE DR
MURFREESBORO, TN 37129

2026

20-2N-28-0000-0001-0120

BUILDING CHARACTERISTICS

ELEMENT	CD	CONSTRUCTION
Exterior Wall	17	CB STUCCO 100
Roof Structur	08	IRREGULAR 100
Roof Cover	03	COMP SHNGL 100
Interior Wall	08	DECORATIVE 80
Interior Wall	05	DRYWALL 20
Interior Floo	14	CARPET 80
Interior Floo	15	HARDTILE 20
Ceiling	01	FIN.SUSPD 100
Air Condition	03	CENTRAL 100
Heating Type	04	AIR DUCTED 100
Fixtures		29 100
Frame	01	TYP WD 100
Story Height		10 100
RMS		21 100
Stories	2.	2. 100
Units		0 100
Occupancy	00	NONE 100
Quality	04	Quality Level 04
DOR CODE	0600	RETIREMENT HOMES
MAP NUM		MKT AREA 03
NEIGHBORHOOD/LOC	3039.00	

AREA TYPE	TOTAL GROSS AREA	PCT OF BASE	YEAR	TOT ADJ AREA	SUBAREA MARKET VALUE
BAS	5,600	100	1998	5,600	601,576
FOP	10	30	1998	3	323
FOP	24	30	1998	7	752
FOP	415	30	1998	124	13,321
FOP	486	30	1998	146	15,684
FST	208	50	1998	104	11,172
FUS	1,944	100	1998	1,944	208,833
KTG	1,286	125	1998	1,608	172,739
UOP	56	20	1998	11	1,182
UOP	113	20	1998	23	2,470
TOTALS	10,383			9,618	1,033,207

MARKET ADJUSTMENTS

TYPE	MDL	EFF. AREA	TOT ADJ PTS	EFF. BASE RATE	REPL. COST NEW	AYB	EYB	ECON	FNCT		NORM	% COND
0303	04	9,618	109.6623	124.19	1,194,459	1998	1998	0	0	0	13.50	86.50

1 CLUB HOUSE 0% - 0 Heated Area: 8830 HX Base Yr

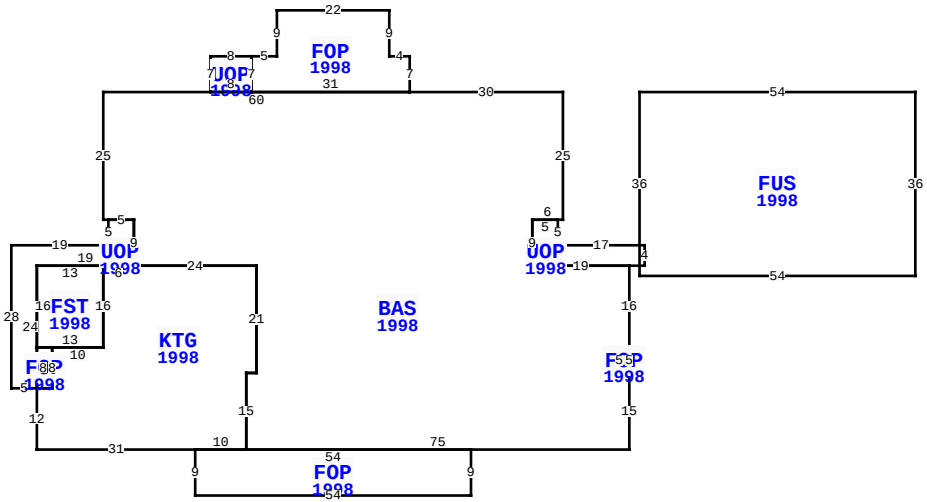

** This building has 11 Sub-Areas

48 OSPREY VILLAGE DR, FERNANDINA BEACH

BLD DATE	05/05/2022	KK	LGL DATE		
XF DATE	05/05/2022	KK	LAND DATE	05/12/2025	DC
INC DATE			AG DATE		

NASSAU COUNTY PROPERTY

PAGE 1 of 2 8

VALUATION SUMMARY

VALUATION BY	STANDARD
Tax Group: 8	Tax Dist:
BUILDING MARKET VALUE	1,487,097
TOTAL MARKET OB/XF VALUE	92,381
TOTAL LAND VALUE - MARKET	535,500
TOTAL MARKET VALUE	2,114,978
SOH/AGL Deduction	221,842
ASSESSED VALUE	1,893,136
TOTAL EXEMPTION VALUE	0
BASE TAXABLE VALUE	1,893,136
TOTAL JUST VALUE	2,114,978
NCON VALUE	0
INCOME VALUE	
PREVIOUS YEAR MKT VALUE	1,721,033

PERMIT NUM	DESCRIPTION	AMT	ISSUED
21009592	ROOF	45,220	07/21/2021
20001798	NEW CONSTR	443,119	07/27/2020
20001891	SWIM POOL	161,000	07/27/2020
B9704366	NEW CONSTR	770,000	10/01/1997

SALES DATA

OFF RECORD Number	DATE	TYPE INST	Q / U	V / I	RSN CD	SALE PRICE
2005/609	7/17/2015	MS	U	I	11	100
GRANTOR: AGI ACQUISITIONS LLC						
GRANTEE: NHI-REIT OF SEASIDE						
1953/0879	12/17/2014	SW	U	I	35	64,040,000
GRANTOR: HEALTH CARE REIT INC						
GRANTEE: AGI ACQUISITIONS LL						

BUILDING NOTES

BUILDING DIMENSIONS

BAS=[YR=1998] W30 FOP=[YR=1998] N7 W4 N9 W22 S9 W5 UOP=[YR=1998] W8 S7 E8 N7 $ S7 E31 $ W60 S25 E1 UOP=[YR=1998] S5 W19 S28 E5 FOP=[YR=1998] E3 N8 W3 S8 $ N24 E19 N9 W5 $ E5 S9 KTG=[YR=1998] W6FST=[YR=1998] W13 S16 E13 N16 $ S16 W10 S8 W3 S12 E31 FOP=[YR=1998] S9 E54 N9 W54 $ E10 N15 E2 N21 W24 $ E24 S21 W2 S15 E75 N15 FOP=[YR=1998] N5 W2 S5 E2 $ W2 N5 E2 N16 UOP=[YR=1998] E3 N4 W17 N5 W5 S9 E19 $ W19 N9 E6 N25 $ PTR= E15 FUS=[YR=1998] E54 S36 W54 N36 $ W15 $.

EXTRA FEATURES

LN	OB/XF CODE	DESCRIPTION	BLD	CAP	L	W	UNITS	UT	Adj R	ADJ UNIT PRICE	ORIG COND	YEAR ON	YEAR ACTUAL	Q	% COND	OB/XF MKT VALUE	NOTES
1	0504	FP-ELECTRI	0	0	0	0	1.00	UT	2,000.00	2,000.00	100	1998	1998	3	79	1,580	
2	0803	ASPHALT C	0	0	0	0	15,380.00	SF	2.00	2.00	100	1998	1998	3	50	15,380	
3	0400	CONC CURB	0	0	0	0	411.00	LF	15.00	15.00	100	1998	1998	3	79	4,870	
4	0811	CONCRETE B	0	0	0	0	800.00	SF	5.20	5.20	100	1998	1998	3	72	2,995	
5	0972	ST LGHT UN	0	0	0	0	2.00	UT	2,530.00	2,530.00	100	1998	1998	3	40	2,024	
6	0402	CONC BUMPE	0	0	0	0	22.00	UT	25.00	25.00	100	1998	1998	3	79	435	
7	0810	CONCRETE A	0	0	10	12	120.00	SF	6.50	6.50	100	1998	1998	3	72	562	
8	0446	BOX FNC 6'	0	0	0	0	32.00	LF	20.00	20.00	100	1998	1998	3	20	128	
9	0463	FENCE GATE	0	0	0	0	2.00	UT	300.00	300.00	100	1998	1998	3	39	234	
10	0383	FREEZER	0	0	8	7	56.00	SF	105.00	105.00	100	1998	1998	3	35	2,058	

TOTAL OB/XF 30,266

LAND DESCRIPTION

LN	USE CODE	CLS	LAND USE DESCRIPTION	CAP	RD	LOC ZONE	FRONT	DEPTH	TOT LND UTS	UNIT TYPE	DT	DPTH FACT	% COND	TOT ADJ	UNIT PRICE	ADJ UNIT PRICE	LAND VALUE	OTHER ADJUSTMENTS AND NOTES	YEAR	DENSITY	DECL	FRZ	YR	CONSRV
1	000600	C	RETIREMENT	0		PUD	0.00	0.00	1.53	AC		1.00	1.00	1.00	350,000.00	350,000.00	535,500							

REVIEW DATE 05/01/2025 BY KB Total Acres: 1.53 Total Land Value: 535,500 Market: 0 Agricultural: 0 Common: 535,500 PRINTED 07/09/2026 BY SYS

PT OR 1953/879
CLUB HOUSE FOR OSPREY VILLAGE

NHI-REIT OF SEASIDE LLC
222 ROBERT ROSE DR
MURFREESBORO, TN 37129

2026

20-2N-28-0000-0001-0120

BUILDING CHARACTERISTICS

ELEMENT	CD	CONSTRUCTION
Exterior Wall	17	CB STUCCO 60
Exterior Wall	28	GLASS THRM 40
Roof Structur	04	WOOD TRUSS 100
Roof Cover	11	SLATE 100
Interior Wall	05	DRYWALL 60
Interior Wall	08	DECORATIVE 40
Interior Floo	03	CONC FINSH 70
Interior Floo	11	CLAY TILE 30
Ceiling	02	F.NOT SUS 100
Air Condition	03	CENTRAL 100
Heating Type	04	AIR DUCTED 100
Fixtures		15 100
Frame	03	MASONRY 100
Story Height		13 100
RMS		6 100
Stories	1.	1. 100
Units		0 100
Occupancy	00	NONE 100
Quality	04	Quality Level 04

DOR CODE	0600	RETIREMENT HOMES	
MAP NUM		MKT AREA	03
NEIGHBORHOOD/LOC	3039.00		

AREA TYPE	TOTAL GROSS AREA	PCT OF BASE	YEAR	TOT ADJ AREA	SUBAREA MARKET VALUE
BAS	104	100	2021	104	16,459
BAS	144	100	2021	144	22,790
BAS	182	100	2021	182	28,803
BAS	739	100	2021	739	116,954
BAS	1,680	100	2021	1,680	265,877
CAN	24	30	2021	7	1,107
FST	25	50	2021	12	1,899
TOTALS	2,898			2,868	453,890

MARKET ADJUSTMENTS

TYPE	MDL	EFF. AREA	TOT ADJ PTS	EFF. BASE RATE	REPL. COST NEW	AYB	EYB	ECON	FNCT		NORM	% COND
0303	04	2,868	142.5927	161.49	463,153	2021	2021	0	0	0	2.00	98.00

2 CLUB HOUSE 0% - 0 Heated Area: 2849 HX Base Yr

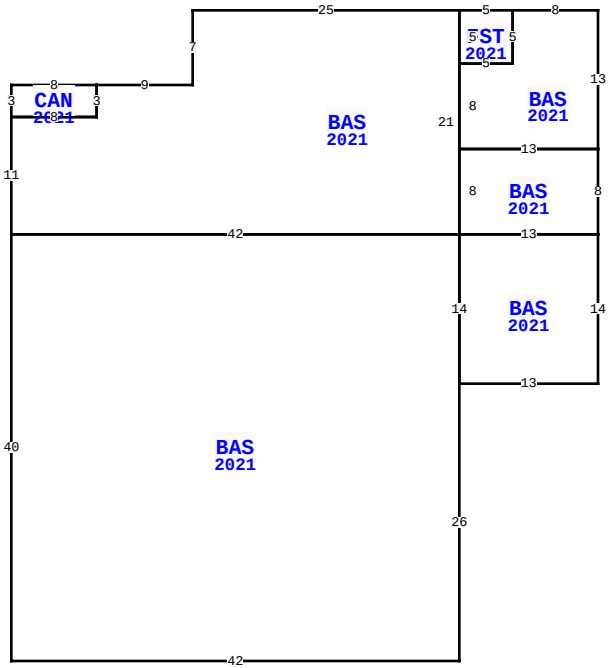

48 OSPREY VILLAGE DR, FERNANDINA BEACH

BLD DATE	05/05/2022	KK	LGL DATE		
XF DATE	05/05/2022	KK	LAND DATE	05/12/2025	DC
INC DATE			AG DATE		

NASSAU COUNTY PROPERTY

PAGE 2 of 2 8

VALUATION SUMMARY

VALUATION BY	STANDARD
Tax Group: 8	Tax Dist:
BUILDING MARKET VALUE	1,487,097
TOTAL MARKET OB/XF VALUE	92,381
TOTAL LAND VALUE - MARKET	535,500
TOTAL MARKET VALUE	2,114,978
SOH/AGL Deduction	221,842
ASSESSED VALUE	1,893,136
TOTAL EXEMPTION VALUE	0
BASE TAXABLE VALUE	1,893,136
TOTAL JUST VALUE	2,114,978
NCON VALUE	0
INCOME VALUE	
PREVIOUS YEAR MKT VALUE	1,721,033

PERMIT NUM	DESCRIPTION	AMT	ISSUED

SALES DATA

OFF RECORD Number	DATE	TYPE INST	Q / U	V / I	RSN CD	SALE PRICE
2005/609	7/17/2015	MS	U	I	11	100
GRANTOR: AGI ACQUISITIONS LLC						
GRANTEE: NHI-REIT OF SEASIDE						
1953/0879	12/17/2014	SW	U	I	35	64,040,000
GRANTOR: HEALTH CARE REIT INC						
GRANTEE: AGI ACQUISITIONS LL						

BUILDING NOTES

BUILDING DIMENSIONS

BAS=[YR=2021] W8 FST=[YR=2021] W5 BAS=[YR=2021] W25 S7 W9 CAN=[YR=2021] W8 S3 E8 N3$ S3 W8 S11 BAS=[YR=2021] S40 E42 N26 BAS=[YR=2021] E13 N14 BAS=[YR=2021] N8 W13 S8 E13$ W13 S14$ N14 W42$ E42 N21$ S5 E5 N5$ S5 W5 S8 E13 N13$.

EXTRA FEATURES

L N	OB/XF CODE	DESCRIPTION	BLD	CAP	L	W	UNITS	UT	Adj R	ADJ UNIT PRICE	ORIG COND	YEAR ON	YEAR ACTUAL	Q	% COND	OB/XF MKT VALUE	NOTES
11	0381	COOLER	0	0	8	7	56.00	SF	82.50	82.50	100	1998	1998	3	35	1,617	
12	1076	TRELLIS A	0	0	16	10	160.00	SF	7.50	7.50	100	2000	2000	3	85	1,020	
13	0505	FLAGPOLE A	0	0	0	0	20.00	LF	50.00	50.00	100	2010	2010	3	35	350	
14	0418	EXHST FAN	0	0	0	0	1.00	UT	400.00	400.00	100	1998	1998	3	20	80	
15	0865	POOL SF	0	0	0	0	640.00	SF	80.00	80.00	100	2021	2021		93	47,616	
16	0812	CONCRETE C	0	0	0	0	1,315.00	SF	4.00	4.00	100	2021	2021	3	98	5,155	
17	0400	CONC CURB	0	0	0	0	94.00	LF	15.00	15.00	100	2021	2021	3	99	1,396	
18	0402	CONC BUMPE	0	0	0	0	3.00	UT	25.00	25.00	100	2021	2021	3	99	74	
19	0972	ST LGHT UN	0	0	0	0	2.00	UT	2,530.00	2,530.00	100	2021	2021	3	95	4,807	

LAND DESCRIPTION

TOTAL OB/XF 62,115

L N	USE CODE	CLS	LAND USE DESCRIPTION	CAP	R D	LOC ZONE	FRONT	DEPTH	TOT LND UTS	UNIT TYPE	D T	DPTH FACT	% COND	TOT ADJ	UNIT PRICE	ADJ UNIT PRICE	LAND VALUE	OTHER ADJUSTMENTS AND NOTES	YEAR	DENSITY	DECL	FRZ	YR	CONSRV

REVIEW DATE 05/01/2025 BY KB Total Acres: 1.53 Total Land Value: 535,500 Market: 0 Agricultural: 0 Common: 535,500 PRINTED 07/09/2026 BY SYS