LOT 32
CRANE ISLAND PHASE 1 PB 8/308

BATZLER TIMOTHY & MARIANNE
69 BROADBENT WAY
FERNANDINA BEACH, FL 32034

2026

19-2N-28-1000-0032-0000

BUILDING CHARACTERISTICS

ELEMENT	CD	CONSTRUCTION
Exterior Wall	31	HARDIE BRD 100
Roof Structur	08	IRREGULAR 100
Roof Cover	13	STAND SEAM 100
Interior Wall	05	DRYWALL 100
Interior Floo	12	HARDWOOD 90
Interior Floo	11	CLAY TILE 10
Air Condition	03	CENTRAL 100
Heating Type	04	AIR DUCTED 100
Bedrooms		5 100
Bathrooms		5.5 100
Frame	02	WOOD FRAME 100
Stories	2.	2. 100
Units		0 100
Quality	03	Quality Level 03

DOR CODE	0100	SINGLE FAMILY	
MAP NUM		MKT AREA	01
NEIGHBORHOOD/LOC	2036.0100		

AREA TYPE	TOTAL GROSS AREA	PCT OF BASE	YEAR	TOT ADJ AREA	SUBAREA MARKET VALUE
BAS	32	100	2024	32	15,332
BAS	2,428	100	2024	2,428	1,163,309
FDG	717	60	2024	430	206,023
FOP	192	30	2024	58	27,789
FSP	360	40	2024	144	68,993
FSP	372	40	2024	149	71,389
FUS	388	100	2024	388	185,900
FUS	895	100	2024	895	428,814
STP	10	10	2024	1	480
STR	72	10	2024	7	3,354
TOTALS	5,583			4,558	2,183,840

MARKET ADJUSTMENTS

TYPE	MDL	EFF. AREA	TOT ADJ PTS	EFF. BASE RATE	REPL. COST NEW	AYB	EYB	ECON	FNCT		NORM	% COND
0500	22	4,558	302.1648	481.53	2,194,814	2023	2023	0	0	0	0.50	99.50

1 SFR CUST 100% - 2024 Heated Area: 3743 HX Base Yr 2024

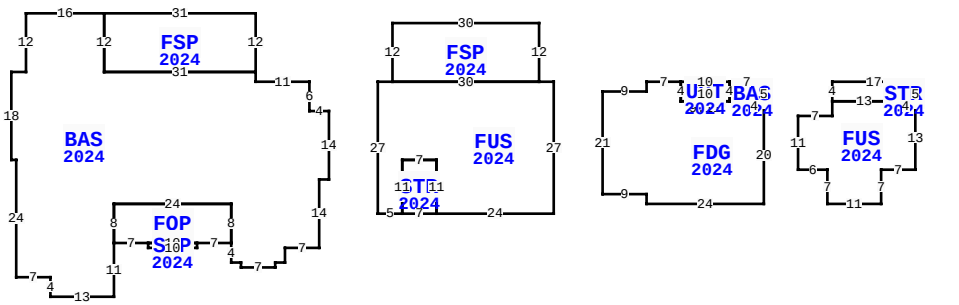

** This building has 12 Sub-Areas

69 BROADBENT WAY, FERNANDINA BEACH

BLD DATE		LGL DATE	
XF DATE		LAND DATE	
INC DATE		AG DATE	

NASSAU COUNTY PROPERTY

PAGE 1 of 1 2

VALUATION SUMMARY

VALUATION BY		STANDARD
Tax Group: 2	Tax Dist:	
BUILDING MARKET VALUE		2,183,840
TOTAL MARKET OB/XF VALUE		24,450
TOTAL LAND VALUE - MARKET		350,000
TOTAL MARKET VALUE		2,558,290
SOH/AGL Deduction		0
ASSESSED VALUE		2,558,290
TOTAL EXEMPTION VALUE	HX HB	51,411
BASE TAXABLE VALUE		2,506,879
TOTAL JUST VALUE		2,558,290
NCON VALUE		0
INCOME VALUE		
PREVIOUS YEAR MKT VALUE		2,587,270

PERMIT NUM	DESCRIPTION	AMT	ISSUED
20211756			04/11/2023
20211756	NEW CONSTR	0	11/29/2021
20211757	GARAGE	0	11/29/2021

SALES DATA

OFF RECORD Number	DATE	TYPE INST	Q / U	V / I	RSN CD	SALE PRICE
2390/1452	9/09/2020	WD	Q	V	01	408,000
GRANTOR: BONE CRAIG & SOLANGE						
GRANTEE: BATZLER TIMOTHY & M						
2371/0221	6/23/2020	WD	Q	V	01	382,000
GRANTOR: MORGAN JAMES HAROLD R						
GRANTEE: BONE CRAIG & SOLANG						

BUILDING NOTES

EXTRA FEATURES

LN	OB/XF CODE	DESCRIPTION	BLD	CAP	L	W	UNITS	UT	Adj R	ADJ UNIT PRICE	ORIG COND	YEAR ON	YEAR ACTUAL	Q	% COND	OB/XF MKT VALUE	NOTES
2	0502	FP-CUSTOM	0	100	0	0	2.00	UT	10,000.00	10,000.00	100	2024	2023		99	19,800	
3	0600	SUMMER KIT	0	100	0	0	1.00	UT	5,000.00	5,000.00	100	2024	2023		93	4,650	

BUILDING DIMENSIONS

BAS=[YR=2024;ORIG=80,10] W11 N2 W31 N12 W16 S12 W3 S18 E1 S24 E7 S4 E13 N11 N8 E24 S8 S4 E2 S1 E7 N1 E2 N3 E7 N14 E2 N14 W4 N6 $
FUS=[YR=2024;ORIG=94,10] S27 E5 N11 E7 S11 E24 N27 W3 W30 W3 $
FDG=[YR=2024;ORIG=173,15] W4 N1 W3.1 W9.11 N4 W7 S2 W9 S21 E9 S2 E24 N20 $
FUS=[YR=2024;ORIG=180,17] S11 E6 S7 E11 N7 E7 N13 W4 N1 W13 S3 W7 $
FSP=[YR=2024;ORIG=38,-4] S12 E31 N12 W31 $
FSP=[YR=2024;ORIG=97,-2] E30 S12 W30 N12 $
FOP=[YR=2024;ORIG=40,35] E24 S8 W7 W10 W7 N8 $

LAND DESCRIPTION

TOTAL OB/XF 24,450

LN	USE CODE	CLS	LAND USE DESCRIPTION	CAP	RD	LOC ZONE	FRONT	DEPTH	TOT LND UTS	UNIT TYPE	DT	DPTH FACT	% COND	TOT ADJ	UNIT PRICE	ADJ UNIT PRICE	LAND VALUE	OTHER ADJUSTMENTS AND NOTES	YEAR	DENSITY	DECL	FRZ	YR	CONSRV
1	000100	C	RES	100		R-1	0.00	0.00	1.00	LT		1.00	1.00	1.00	350,000.00	350,000.00	350,000							

REVIEW DATE 01/31/2024 BY DJ Total Acres: 0.00 Total Land Value: 350,000 Market: 0 Agricultural: 0 Common: 350,000 PRINTED 07/09/2026 BY SYS