LOT 1
CRANE ISLAND PHASE 1 PB 8/308

STAMM TODD M
4911 GLEN HEATHER COURT
SUGAR LAND, TX 77479

2026

19-2N-28-1000-0001-0000

BUILDING CHARACTERISTICS

ELEMENT	CD	CONSTRUCTION
Exterior Wall	31	HARDIE BRD 100
Roof Structur	08	IRREGULAR 100
Roof Cover	13	STAND SEAM 100
Interior Wall	05	DRYWALL 100
Interior Floo	12	HARDWOOD 70
Interior Floo	15	HARDTILE 30
Air Condition	03	CENTRAL 100
Heating Type	04	AIR DUCTED 100
Bedrooms		3 100
Bathrooms		2.5 100
Frame	02	WOOD FRAME 100
Stories	2.	2. 100
Units		0 100
Quality	03	Quality Level 03
DOR CODE	0100	SINGLE FAMILY
MAP NUM		MKT AREA 01
NEIGHBORHOOD/LOC	2036.0100	

AREA TYPE	TOTAL GROSS AREA	PCT OF BASE	YEAR	TOT ADJ AREA	SUBAREA MARKET VALUE
BAS	1,697	100	2022	1,697	847,104
DCK	48	10	2022	5	2,496
FDG	815	60	2022	489	244,098
FOP	152	30	2022	46	22,962
FOP	228	30	2022	68	33,944
FUS	496	100	2022	496	247,592
FUS	636	100	2022	636	317,477
STP	96	10	2022	10	4,992
STP	102	10	2022	10	4,992
STR	85	10	2022	8	3,994
TOTALS	4,500			3,500	1,747,122

MARKET ADJUSTMENTS

TYPE	MDL	EFF. AREA	TOT ADJ PTS	EFF. BASE RATE	REPL. COST NEW	AYB	EYB	ECON	FNCT		NORM	% COND
0500	22	3,500	316.4040	504.22	1,764,770	2022	2022	0	0	0	1.00	99.00

1 SFR CUST 0% - 0 Heated Area: 2829 HX Base Yr

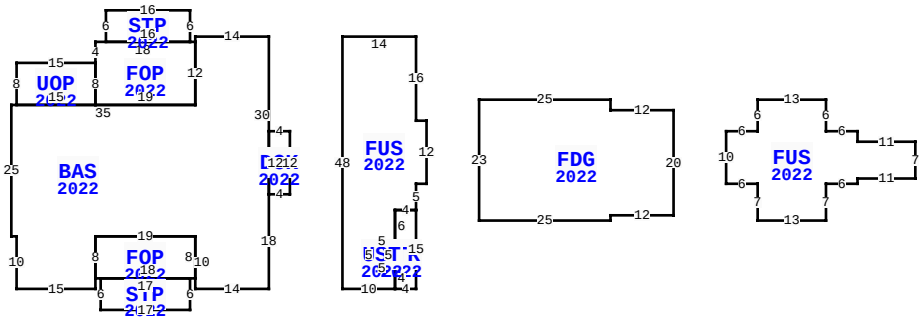

** This building has 12 Sub-Areas

2 CRANE ISLAND DR, FERNANDINA BEACH

BLD DATE		LGL DATE	
XF DATE		LAND DATE	
INC DATE		AG DATE	

NASSAU COUNTY PROPERTY

PAGE 1 of 1 2

VALUATION SUMMARY

VALUATION BY	STANDARD
Tax Group: 2	Tax Dist:
BUILDING MARKET VALUE	1,747,122
TOTAL MARKET OB/XF VALUE	0
TOTAL LAND VALUE - MARKET	550,000
TOTAL MARKET VALUE	2,297,122
SOH/AGL Deduction	266,747
ASSESSED VALUE	2,030,375
TOTAL EXEMPTION VALUE	0
BASE TAXABLE VALUE	2,030,375
TOTAL JUST VALUE	2,297,122
NCON VALUE	0
INCOME VALUE	
PREVIOUS YEAR MKT VALUE	2,319,245

PERMIT NUM	DESCRIPTION	AMT	ISSUED
20200908	NEW CONSTR	0	03/08/2021

SALES DATA

OFF RECORD Number	DATE	TYPE INST	Q U	V I	RSN CD	SALE PRICE
2363/0068	5/22/2020	WD	Q	V	01	525,000

GRANTOR: CRANE ISLAND MODEL HO

GRANTEE: STAMM TODD M

BUILDING NOTES

BUILDING DIMENSIONS

BAS=[YR=2022;ORIG=0,0] W14 S1 S12 W35 S25 E1 S10 E15 N2 N8 E19 S10 E14 N18 N30 $
FDG=[YR=2022;ORIG=77,14] W12 N2 W25 S23 E25 N1 E12 N20 $
FUS=[YR=2022;ORIG=14,0] E14 S16 E2 S12 W2 S5 W4 S15 W10 N48 $
FUS=[YR=2022;ORIG=87,18] E6 N6 E13 S6 E6 S2 E11 S7 W11 S1 W6 S7 W13 N7 W6 N10 $
FOP=[YR=2022;ORIG=-14,1] W1 W18 S4 S8 E19 N12 $
FOP=[YR=2022;ORIG=-33,46] E1 E18 N8 W19 S8 $
UOP=[YR=2022;ORIG=-33,5] W15 S8 E15 N8 $
STP=[YR=2022;ORIG=-32,46] S6 E17 N6 W17 $
STP=[YR=2022;ORIG=-15,1] N6 W16 S6 E16 $
STR=[YR=2022;ORIG=28,33] S15 W4 N4 W5 N5 E5 N6 E4 $

EXTRA FEATURES

L N	OB/XF CODE	DESCRIPTION	BLD	CAP	L	W	UNITS	UT	Adj R	ADJ UNIT PRICE	ORIG COND	YEAR ON	YEAR ACTUAL	Q	% COND	OB/XF MKT VALUE	NOTES

LAND DESCRIPTION

TOTAL OB/XF 0

L N	USE CODE	CLS	LAND USE DESCRIPTION	CAP	R D	LOC ZONE	FRONT	DEPTH	TOT LND UTS	UNIT TYPE	D T	DPTH FACT	% COND	TOT ADJ	UNIT PRICE	ADJ UNIT PRICE	LAND VALUE	OTHER ADJUSTMENTS AND NOTES	YEAR	DENSITY	DECL	FRZ	YR	CONSRV
1	000116	C	RES MARSH	0		R-1	0.00	0.00	1.00	LT		1.00	1.00	1.00	550,000.00	550,000.00	550,000							

REVIEW DATE 01/04/2023 BY TW Total Acres: 0.00 Total Land Value: 550,000 Market: 0 Agricultural: 0 Common: 550,000 PRINTED 07/09/2026 BY SYS