IN OR 1354/845
ESMT IN OR 2651-1812

CHURCH OF GOD BY FAITH INC
2409 OLD MIDDELBURG ROAD NORTH
JACKSONVILLE, FL 32210

2026

19-2N-25-0000-0140-0000

BUILDING CHARACTERISTICS

ELEMENT	CD	CONSTRUCTION
Exterior Wall	17	CB STUCCO 90
Exterior Wall	20	FACE BRICK 10
Roof Structur	04	WOOD TRUSS 100
Roof Cover	03	COMP SHNGL 100
Interior Wall	05	DRYWALL 100
Interior Floo	14	CARPET 80
Interior Floo	05	ASPH TILE 20
Ceiling	02	F.NOT SUS 100
Air Condition	03	CENTRAL 100
Heating Type	04	AIR DUCTED 100
Fixtures		20 100
Frame	03	MASONRY 100
Story Height		20 100
RMS		12 100
Stories	2.	2. 100
Units		0 100
BUD8 Adjustme	06	DIST 1D 100
Occupancy	00	NONE 100
Quality	03	Quality Level 03

DOR CODE	7100	CHURCHES	
MAP NUM		MKT AREA	08
NEIGHBORHOOD/LOC	8001.00		

AREA TYPE	TOTAL GROSS AREA	PCT OF BASE	YEAR	TOT ADJ AREA	SUBAREA MARKET VALUE
BAS	8,644	100	1993	8,644	1,143,753
FUS	720	100	1993	720	95,269
SFB	2,432	80	1993	1,946	257,490
STP	20	10	1993	2	265
STP	40	10	1993	4	530
STP	48	10	1993	5	662
STP	49	10	1993	5	662
STP	68	10	1993	7	926
STP	126	10	1993	13	1,720
STP	318	10	1993	32	4,234
TOTALS	12,565			11,388	1,506,832

MARKET ADJUSTMENTS

TYPE	MDL	EFF. AREA	TOT ADJ PTS	EFF. BASE RATE	REPL. COST NEW	AYB	EYB	ECON	FNCT		NORM	% COND
7101	04	11,388	108.8172	180.91	2,060,203	1973	1973	0	0	0	26.86	73.14

1 CHURCH 0% - 0 Heated Area: 11310 HX Base Yr

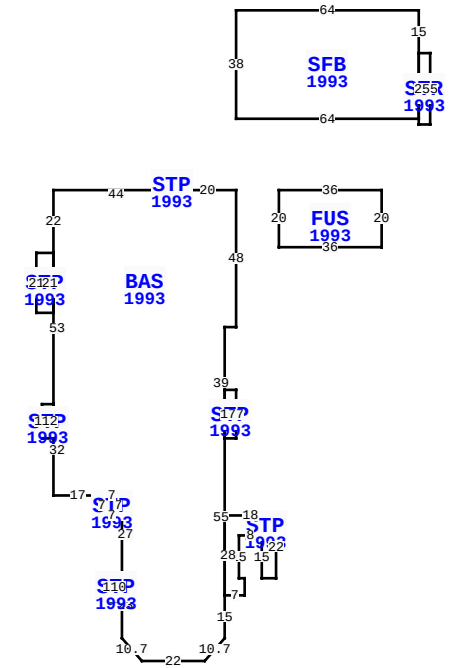

** This building has 11 Sub-Areas

45083 WHITE RD, CALLAHAN

BLD DATE	07/23/2019	KK	LGL DATE	
XF DATE	07/23/2019	KK	LAND DATE	05/07/2026 MLU
INC DATE			AG DATE	

NASSAU COUNTY PROPERTY

PAGE 1 of 1 6

VALUATION SUMMARY

VALUATION BY		STANDARD
Tax Group: 6	Tax Dist:	
BUILDING MARKET VALUE		1,506,832
TOTAL MARKET OB/XF VALUE		4,057
TOTAL LAND VALUE - MARKET		24,000
TOTAL MARKET VALUE		1,534,889
SOH/AGL Deduction		292,063
ASSESSED VALUE		1,242,826
TOTAL EXEMPTION VALUE	02	1,242,826
BASE TAXABLE VALUE		0
TOTAL JUST VALUE		1,534,889
NCON VALUE		0
INCOME VALUE		
PREVIOUS YEAR MKT VALUE		1,667,246

PERMIT NUM	DESCRIPTION	AMT	ISSUED
19001087	REPAIR/RRF	25,000	02/12/2019
M9656	H/AC	0	04/01/2005
P7555	NEW CONSTR	0	01/01/2004
P014558	REMODEL	0	02/01/2001
B007541	ADDITION	250,000	10/01/2000
E952004	NEW CONSTR	4,000	07/01/1995

SALES DATA

OFF RECORD Number	DATE	TYPE INST	Q / U	V / I	RSN CD	SALE PRICE
1354/0845	9/30/2005	WD	Q	I	06	100

GRANTOR: CHURCH OF GOD BY FAIT

GRANTEE: CHURCH OF GOD BY FA

BUILDING NOTES

BUILDING DIMENSIONS

BAS=[YR=1993] W20 STP=[YR=1993] N4 W5 S4 E5$ W44 S22 STP=[YR=1993] W6 S21 E6 N21$ S53 STP=[YR=1993] W4 S12 E4 N12$ S32 E17 STP=[YR=1993] S7 E7 N7 W7$ E7 S27 STP=[YR=1993] W4 S10 E4 N10$ S23 D8 R7 E22 U8 R7 N15 STP=[YR=1993] E7 N6 W2 N15 E8 S15 E5 N22 W18 S28$ N55 STP=[YR=1993] E4 N17 W4 S17$ N39 E4 N48$ PTR= E15 FUS=[YR=1993] E36 S20 W36 N20$ W15$ PTR=N25 SFB=[YR=1993] N38 E64 S15 STR=[YR=1993] E4 S25 W4 N25$ S23 W64$ S25$.

EXTRA FEATURES

L N	OB/XF CODE	DESCRIPTION	BLD	CAP	L	W	UNITS	UT	Adj R	ADJ UNIT PRICE	ORIG COND	YEAR ON	YEAR ACTUAL	Q	% COND	OB/XF MKT VALUE	NOTES
1	0812	CONCRETE C	0	0	0	0	1,861.00	SF	4.00	4.00	100	1990	1990	3	54.5	4,057	

LAND DESCRIPTION

TOTAL OB/XF 4,057

L N	USE CODE	CLS	LAND USE DESCRIPTION	CAP	R D	LOC ZONE	FRONT	DEPTH	TOT LND UTS	UNIT TYPE	D T	DPTH FACT	% COND	TOT ADJ	UNIT PRICE	ADJ UNIT PRICE	LAND VALUE	OTHER ADJUSTMENTS AND NOTES	YEAR	DENSITY	DECL	FRZ	YR	CONSRV
1	007100	C	CHURCH	0		RM	0.00	0.00	0.48	AC		1.00	1.00	1.00	50,000.00	50,000.00	24,000							

REVIEW DATE 01/01/2023 BY CD Total Acres: 0.48 Total Land Value: 24,000 Market: 0 Agricultural: 0 Common: 24,000 PRINTED 07/09/2026 BY SYS