PT SW1/4 OF SW1/4 OF NW1/4
SEC 20-1S-23E IN OR 2834/1313
PARCEL 1

SHUMATE MARK OWEN & JESSICA MARY
990 LIMOUSINE LAND
BRYCEVILLE, FL 32009

2026

19-1S-23-0000-0002-0010

BUILDING CHARACTERISTICS

ELEMENT	CD	CONSTRUCTION
Exterior Wall	31	HARDIE BRD 100
Roof Structur	03	GABLE/HIP 100
Roof Cover	03	COMP SHNGL 100
Interior Wall	05	DRYWALL 100
Interior Floo	13	LVT/LAMNT 100
Air Condition	03	CENTRAL 100
Heating Type	04	AIR DUCTED 100
Bedrooms		3 100
Bathrooms		2.5 100
Frame	02	WOOD FRAME 100
Stories	1.	1. 100
Units		0 100
Quality	01	Quality Level 01

DOR CODE	0100	SINGLE FAMILY	
MAP NUM		MKT AREA	09
NEIGHBORHOOD/LOC	9001.00		

AREA TYPE	TOTAL GROSS AREA	PCT OF BASE	YEAR	TOT ADJ AREA	SUBAREA MARKET VALUE
BAS	2,283	100	2025	2,283	360,189
FGR	637	55	2025	350	55,220
FOP	168	30	2025	50	7,889
FOP	264	30	2025	79	12,464
PTO	84	5	2025	4	631
TOTALS	3,436			2,766	436,392

MARKET ADJUSTMENTS

TYPE	MDL	EFF. AREA	TOT ADJ PTS	EFF. BASE RATE	REPL. COST NEW	AYB	EYB	ECON	FNCT		NORM	% COND
0500	01	2,766	95.0400	157.77	436,392	2024	2024	0	0	0	0.00	100.00

1 SFR CUST 100% - 2025 Heated Area: 2283 HX Base Yr 2025

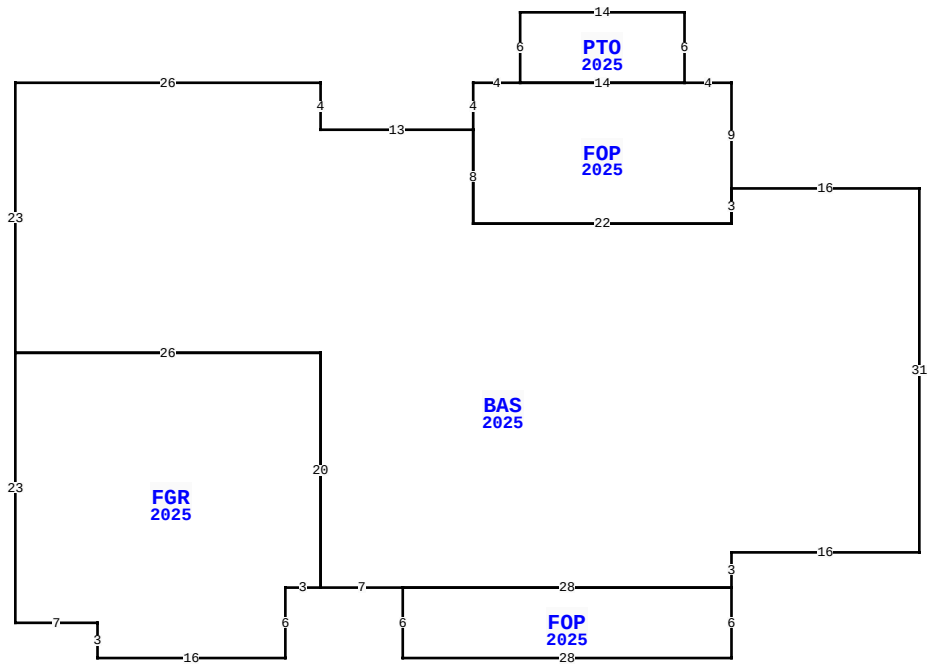

990 LIMOUSINE LN, BRYCEVILLE

BLD DATE		LGL DATE	
XF DATE		LAND DATE	05/12/2026 MLU
INC DATE		AG DATE	

NASSAU COUNTY PROPERTY

PAGE 1 of 1 6

VALUATION SUMMARY

VALUATION BY		STANDARD
Tax Group: 6	Tax Dist:	
BUILDING MARKET VALUE		436,392
TOTAL MARKET OB/XF VALUE		2,000
TOTAL LAND VALUE - MARKET		139,650
TOTAL MARKET VALUE		578,042
SOH/AGL Deduction		101,170
ASSESSED VALUE		476,872
TOTAL EXEMPTION VALUE	HX HB	51,411
BASE TAXABLE VALUE		425,461
TOTAL JUST VALUE		578,042
NCON VALUE		0
INCOME VALUE		
PREVIOUS YEAR MKT VALUE		551,308

PERMIT NUM	DESCRIPTION	AMT	ISSUED
CO240014200	PRIVATE PROVIDER	432,980	12/27/2024
B240002620	PRIVATE PROVIDER	432,980	03/06/2024

SALES DATA

OFF RECORD Number	DATE	TYPE INST	Q U	V I	RSN CD	SALE PRICE
2834/1313	11/20/2025	WD	U	I	11	100
GRANTOR: SHUMATE MARK OWEN & J						
GRANTEE: SHUMATE MARK OWEN &						
2689/1837	1/17/2024	WD	U	V	11	100
GRANTOR: SHUMATE MARK OWEN						
GRANTEE: SHUMATE MARK OWEN						

BUILDING NOTES

EXTRA FEATURES

LN	OB/XF CODE	DESCRIPTION	BLD	CAP	L	W	UNITS	UT	Adj R	ADJ UNIT PRICE	ORIG COND	YEAR ON	YEAR ACTUAL	Q	% COND	OB/XF MKT VALUE	NOTES
2	0504	FP-ELECTRI	0	100	0	0	1.00	UT	2,000.00	2,000.00	100	2025	2024		100	2,000	

BUILDING DIMENSIONS

BAS=[YR=2025;ORIG=140,5] W16 S3 W22 N8 W13 N4 W26 S23 E26 S20 E7 E28 N3 E16 N31 $
FGR=[YR=2025;ORIG=63,19] E26 S20 W3 S6 W16 N3 W7 N23 $
FOP=[YR=2025;ORIG=96,39] E28 S6 W28 N6 $
FOP=[YR=2025;ORIG=102,0] N4 E4 E14 E4 S9 S3 W22 N8 $
PTO=[YR=2025;ORIG=106,-4] N6 E14 S6 W14 $
.

LAND DESCRIPTION

TOTAL OB/XF 2,000

LN	USE CODE	CLS	LAND USE DESCRIPTION	CAP	RD	LOC ZONE	FRONT	DEPTH	TOT LND UTS	UNIT TYPE	DT	DPTH FACT	% COND	TOT ADJ	UNIT PRICE	ADJ UNIT PRICE	LAND VALUE	OTHER ADJUSTMENTS AND NOTES	YEAR	DENSITY	DECL	FRZ	YR	CONSRV
1	000100	C	RES	100		OR			6.65	AC		1.00	1.00	1.00	21,000.00	21,000.00	139,650							

REVIEW DATE 12/30/2024 BY WW Total Acres: 6.65 Total Land Value: 139,650 Market: 0 Agricultural: 0 Common: 139,650 PRINTED 07/09/2026 BY SYS