PT OF NE1/4 OF NW1/4
IN OR 2636/1981

HICKS CYNTHIA LEWIS
376976 KINGS FERRY RD
HILLIARD, FL 32046

2026

18-4N-25-0000-0003-0020

NASSAU COUNTY PROPERTY

BUILDING CHARACTERISTICS

ELEMENT	CD	CONSTRUCTION
Exterior Wall	15	CONC BLOCK 100
Roof Structur	03	GABLE/HIP 100
Roof Cover	12	MODULAR MT 100
Interior Wall	05	DRYWALL 60
Interior Wall	04	PLYWOOD 40
Interior Floo	08	SHT VINYL 70
Interior Floo	03	CONC FINSH 30
Air Condition	03	CENTRAL 100
Heating Type	04	AIR DUCTED 100
Bedrooms		3 100
Bathrooms		3 100
Frame	02	WOOD FRAME 100
Stories	1.	1. 100
Units		0 100
Occupancy	00	NONE 100
Quality	03	Quality Level 03
DOR CODE	0100	SINGLE FAMILY
MAP NUM		MKT AREA 05
NEIGHBORHOOD/LOC	5001.00	

AREA TYPE	TOTAL GROSS AREA	PCT OF BASE	YEAR	TOT ADJ AREA	SUBAREA MARKET VALUE
BAS	428	100	1993	428	33,540
BAS	1,457	100	1993	1,457	114,176
FCP	506	25	1993	126	9,874
FEP	140	80	1993	112	8,776
FOP	40	30	1993	12	940
FOP	96	30	1993	29	2,272
FST	120	55	1993	66	5,172
UOP	400	20	1993	80	6,269
TOTALS	3,187			2,310	181,020

MARKET ADJUSTMENTS

TYPE	MDL	EFF. AREA	TOT ADJ PTS	EFF. BASE RATE	REPL. COST NEW	AYB	EYB	ECON	FNCT		NORM	% COND
0100	01	2,310	98.1960	103.11	238,184	1977	1977	0	0	0	24.00	76.00

1 SINGLE FAM 100% - 2024 Heated Area: 1885 HX Base Yr 2024

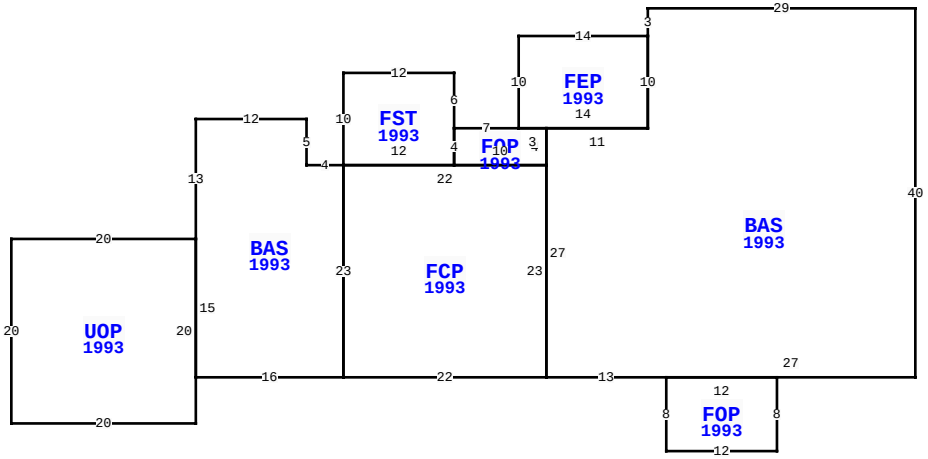

376976 KINGS FERRY RD, HILLIARD

BLD DATE		LGL DATE	
XF DATE		LAND DATE	05/08/2026 MLU
INC DATE		AG DATE	

NASSAU COUNTY PROPERTY — VALUATION SUMMARY

VALUATION BY		STANDARD
Tax Group: 4	Tax Dist:	
BUILDING MARKET VALUE		181,020
TOTAL MARKET OB/XF VALUE		800
TOTAL LAND VALUE - MARKET		50,000
TOTAL MARKET VALUE		231,820
SOH/AGL Deduction		17,406
ASSESSED VALUE		214,414
TOTAL EXEMPTION VALUE	HX HB	51,411
BASE TAXABLE VALUE		163,003
TOTAL JUST VALUE		231,820
NCON VALUE		0
INCOME VALUE		
PREVIOUS YEAR MKT VALUE		220,445

12/22KW: OWNERS (1) WELLS FOR BOTH: 376976 + 37690

PERMIT NUM	DESCRIPTION	AMT	ISSUED

SALES DATA

OFF RECORD Number	DATE	TYPE INST	Q U	V I	RSN CD	SALE PRICE
2636/1981	5/01/2023	WD	U	I	37	75,000
GRANTOR: LEWIS KIMBERLY SUZANN						
GRANTEE: HICKS CYNTHIA LEWIS						
2611/1735	1/05/2023	QC	U	I	11	100
GRANTOR: LEWIS KIMBERLY SUZANN						
GRANTEE: WISE KATE MARIE						

BUILDING NOTES

BUILDING DIMENSIONS

BAS=[YR=1993] W29 S3 FEP=[YR=1993] W14 S10 FOP=[YR=1993] W7 FST=[YR=1993] N6 W12 S10 BAS=[YR=1993] W4 N5 W12 S13 UOP=[YR=1993] W20 S20 E20 N20$ S15 E16 N23$ FCP=[YR=1993] S23 E22 N23 W22 $ E12 N4$ S4 E10 N4 W3$ E14 N10$ S10 W11 S27 E13 FOP=[YR=1993] S8 E12 N8 W12$ E27 N40$.

EXTRA FEATURES

LN	OB/XF CODE	DESCRIPTION	BLD	CAP	L	W	UNITS	UT	Adj R	ADJ UNIT PRICE	ORIG COND	YEAR ON	YEAR ACTUAL	Q	% COND	OB/XF MKT VALUE	NOTES
1	0351	CARPORT MT	0	100	20	20	400.00	SF	10.00	10.00	100	1995	1995	3	20	800	

LAND DESCRIPTION

TOTAL OB/XF 800

LN	USE CODE	CLS	LAND USE DESCRIPTION	CAP	RD	LOC ZONE	FRONT	DEPTH	TOT LND UTS	UNIT TYPE	DT	DPTH FACT	% COND	TOT ADJ	UNIT PRICE	ADJ UNIT PRICE	LAND VALUE	OTHER ADJUSTMENTS AND NOTES	YEAR	DENSITY	DECL	FRZ	YR	CONSRV
1	000100	C	RES	100	0006	OR	0.00	0.00	1.00	AC		1.00	1.00	1.00	50,000.00	50,000.00	50,000							

REVIEW DATE 07/28/2023 BY KW Total Acres: 1.00 Total Land Value: 50,000 Market: 0 Agricultural: 0 Common: 50,000 PRINTED 07/09/2026 BY SYS