PT GOVT LOT 1 OF SEC 17-2N-25E
IN OR 2247/1431
(EX OR 2208/751)

SCARBROUGH CRYSTAL & THOMAS DEAN JR
45612 PETREE RD
CALLAHAN, FL 32011

2026

17-2N-25-0000-0012-0020

BUILDING CHARACTERISTICS

ELEMENT	CD	CONSTRUCTION
Exterior Wall	10	ABOVE AVG 80
Exterior Wall	21	STONE 20
Roof Structur	03	GABLE/HIP 100
Roof Cover	08	CLAY TILE 100
Interior Wall	05	DRYWALL 100
Interior Floo	08	SHT VINYL 50
Interior Floo	14	CARPET 50
Air Condition	03	CENTRAL 100
Heating Type	04	AIR DUCTED 100
Bedrooms		5 100
Bathrooms		3 100
Frame	02	WOOD FRAME 100
Stories	2.	2. 100
Units		0 100
Occupancy	00	NONE 100
Quality	03	Quality Level 03
DOR CODE	0100	SINGLE FAMILY
MAP NUM		MKT AREA 08
NEIGHBORHOOD/LOC	8026.00	

AREA TYPE	TOTAL GROSS AREA	PCT OF BASE	YEAR	TOT ADJ AREA	SUBAREA MARKET VALUE
BAS	2,107	100	2020	2,107	364,798
FGR	583	55	2020	321	55,577
FOP	150	30	2020	45	7,791
FOP	231	30	2020	69	11,947
FUS	949	100	2020	949	164,307
STR	48	10	2020	5	865
TOTALS	4,068			3,496	605,284

MARKET ADJUSTMENTS

TYPE	MDL	EFF. AREA	TOT ADJ PTS	EFF. BASE RATE	REPL. COST NEW	AYB	EYB	ECON	FNCT		NORM	% COND
0500	01	3,496	106.5360	176.85	618,268	2020	2020	0	0	0	2.10	97.90

1 SFR CUST 0% - 0 Heated Area: 3056 HX Base Yr

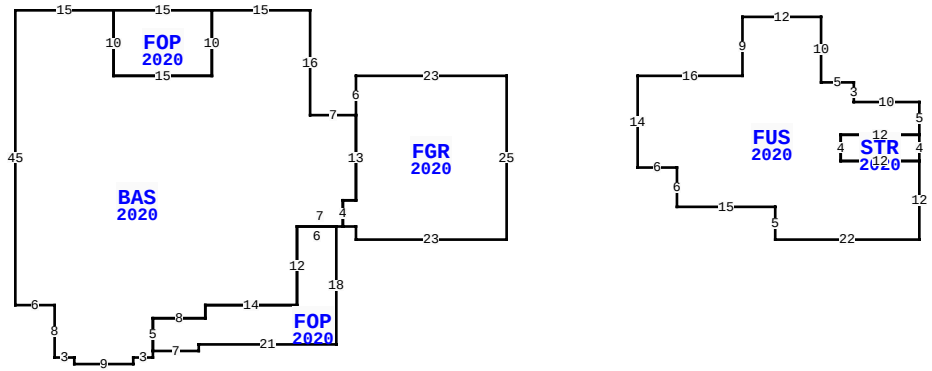

45574 PETREE RD, CALLAHAN

BLD DATE		LGL DATE	
XF DATE		LAND DATE	05/07/2026 MLU
INC DATE		AG DATE	

NASSAU COUNTY PROPERTY

PAGE 1 of 1 6

VALUATION SUMMARY

VALUATION BY	STANDARD
Tax Group: 6	Tax Dist:
BUILDING MARKET VALUE	605,284
TOTAL MARKET OB/XF VALUE	0
TOTAL LAND VALUE - MARKET	113,600
TOTAL MARKET VALUE	718,884
SOH/AGL Deduction	84,171
ASSESSED VALUE	634,713
TOTAL EXEMPTION VALUE	0
BASE TAXABLE VALUE	634,713
TOTAL JUST VALUE	718,884
NCON VALUE	0
INCOME VALUE	
PREVIOUS YEAR MKT VALUE	687,542

PERMIT NUM	DESCRIPTION	AMT	ISSUED
19005181	CO ISSUED	0	05/14/2020
19005181	NEW CONSTR	412,887	05/01/2019

SALES DATA

OFF RECORD Number	DATE	TYPE INST	Q U	V I	RSN CD	SALE PRICE
2247/1431	12/21/2018	QC	U	V	11	100
GRANTOR: SCARBROUGH CRYSTAL &						
GRANTEE: SCARBROUGH THOMAS D						
2207/1145	7/03/2018	QC	U	I	11	44,800
GRANTOR: SCARBROUGH CRYSTAL ET						
GRANTEE: SCARBROUGH CRYSTAL						

BUILDING NOTES

BUILDING DIMENSIONS

FGR=[YR=2020] W23 S6 BAS=[YR=2020] W7 N16 W15 FOP=[YR=2020] W15 S10 E15 N10$ S10 W15 N10 W15 S45 E6 S8 E3 S1 E9 N1 E3 N1 FOP=[YR=2020] E7 N1 E21 N18 W6 S12 W14 S2 W8 S5$ N5 E8 N2 E14 N12 E7 N4 E2 N13$ S13 W2 S4 E2S2 E23 N25$ PTR= E20 FUS=[YR=2020] E16 N9 E12 S10 E5 S3 E10S5 STR=[YR=2020] S4 W12 N4 E12 $ W12 S4 E12 S12 W22 N5 W15 N6 W6 N14$ W20$.

EXTRA FEATURES

L N	OB/XF CODE	DESCRIPTION	BLD	CAP	L	W	UNITS	UT	Adj R	ADJ UNIT PRICE	ORIG COND	YEAR ON	YEAR ACTUAL	Q	% COND	OB/XF MKT VALUE	NOTES

LAND DESCRIPTION

TOTAL OB/XF 0

L N	USE CODE	CLS	LAND USE DESCRIPTION	CAP	R D	LOC ZONE	FRONT	DEPTH	TOT LND UTS	UNIT TYPE	D T	DPTH FACT	% COND	TOT ADJ	UNIT PRICE	ADJ UNIT PRICE	LAND VALUE	OTHER ADJUSTMENTS AND NOTES	YEAR	DENSITY	DECL	FRZ	YR	CONSRV
1	000100	C	RES	0		OR	0.00	0.00	2.84	AC		1.00	1.00	1.00	40,000.00	40,000.00	113,600							

REVIEW DATE 01/01/2023 BY CD Total Acres: 2.84 Total Land Value: 113,600 Market: 0 Agricultural: 0 Common: 113,600 PRINTED 07/09/2026 BY SYS