LOT E
IN OR 2541/573
TUPELO WOODS PB 8/64

CAUSEY JOHN & LESLEY
33298 WOODS LN
CALLAHAN, FL 32011

2026

15-1N-24-2100-000E-0000

BUILDING CHARACTERISTICS

ELEMENT	CD	CONSTRUCTION
Exterior Wall	31	HARDIE BRD 100
Roof Structur	08	IRREGULAR 100
Roof Cover	12	MODULAR MT 100
Interior Wall	05	DRYWALL 100
Interior Floo	13	LVT/LAMNT 70
Interior Floo	11	CLAY TILE 30
Air Condition	03	CENTRAL 100
Heating Type	04	AIR DUCTED 100
Bedrooms		3 100
Bathrooms		3 100
Frame	02	WOOD FRAME 100
Stories	0	0 100
Units		0 100
Occupancy	00	NONE 100
Quality	01	Quality Level 01
DOR CODE	0100	SINGLE FAMILY
MAP NUM		MKT AREA 08
NEIGHBORHOOD/LOC	8005.00	

AREA TYPE	TOTAL GROSS AREA	PCT OF BASE	YEAR	TOT ADJ AREA	SUBAREA MARKET VALUE
BAS	1,450	100	2018	1,450	226,770
FGR	625	55	2018	344	53,799
FOP	872	30	2018	262	40,975
FSP	410	40	2020	164	25,649
FUS	1,119	100	2018	1,119	175,004
STR	48	10	2018	5	782
TOTALS	4,524			3,344	522,978

MARKET ADJUSTMENTS

TYPE	MDL	EFF. AREA	TOT ADJ PTS	EFF. BASE RATE	REPL. COST NEW	AYB	EYB	ECON	FNCT		NORM	% COND
0500	01	3,344	97.1244	161.23	539,153	2018	2018	0	0	0	3.00	97.00

1 SFR CUST 100% - 2023 Heated Area: 2569 HX Base Yr 2023

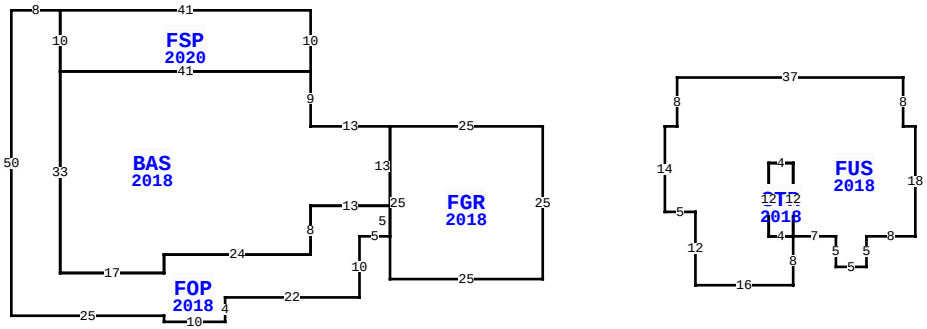

33298 WOODS LN, CALLAHAN

BLD DATE		LGL DATE	
XF DATE		LAND DATE	05/08/2026 MLU
INC DATE		AG DATE	

NASSAU COUNTY PROPERTY

PAGE 1 of 2 6

VALUATION SUMMARY

VALUATION BY		STANDARD
Tax Group: 6	Tax Dist:	
BUILDING MARKET VALUE		558,255
TOTAL MARKET OB/XF VALUE		56,995
TOTAL LAND VALUE - MARKET		173,040
TOTAL MARKET VALUE		788,290
SOH/AGL Deduction		398,525
ASSESSED VALUE		389,765
TOTAL EXEMPTION VALUE	HX HB	51,411
BASE TAXABLE VALUE		338,354
TOTAL JUST VALUE		788,290
NCON VALUE		0
INCOME VALUE		
PREVIOUS YEAR MKT VALUE		746,152

PERMIT NUM	DESCRIPTION	AMT	ISSUED
22013366	SWIM POOL	97,803	08/31/2022
22009593	CARPORT	12,088	06/22/2022
18011697	CO ISSUED	0	11/28/2018
B1633408	NEW CONSTR	298,340	11/16/2016

SALES DATA

OFF RECORD Number	DATE	TYPE INST	Q / U	V / I	RSN CD	SALE PRICE
2541/0573	2/16/2022	WD	Q	I	01	715,000
GRANTOR: HOBBY JOHN ANDREW						
GRANTEE: CAUSEY JOHN & LESLE						
1908/0232	3/11/2014	WD	Q	V	01	60,000
GRANTOR: TUPELO PLANTATION LLC						
GRANTEE: HOBBY JOHN ANDREW						

BUILDING NOTES

EXTRA FEATURES

LN	OB/XF CODE	DESCRIPTION	BLD	CAP	L	W	UNITS	UT	Adj R	ADJ UNIT PRICE	ORIG COND	YEAR ON	YEAR ACTUAL	Q	% COND	OB/XF MKT VALUE	NOTES
1	0500	FP-PRE FAB	0	100	0	0	1.00	UT	3,500.00	3,500.00	100	2018	2018	3	97	3,395	
3	0351	CARPORT MT	0	100	20	20	400.00	SF	10.00	10.00	100	2022	2022	3	90	3,600	
4	0860	POOL/SPA	0	100	0	0	1.00	UT	50,000.00	50,000.00	100	2024	2023	04	100	50,000	

BUILDING DIMENSIONS

BAS=[YR=2018;ORIG=-25,0] W13 N9 W41 S33 E17 N3 E24 N8 E13 N13 $
FOP=[YR=2018;ORIG=-79,-19] W8 S50 E25 S1 E10 N4 E22 N10 E5 N5 W13 S8 W24 S3 W17 N33 N10 $
FUS=[YR=2018;ORIG=20,0] E2 N8 E37 S8 E2 S18 W8 S5 W5 N5 W7 N12 W4 S12 E4 S8 W16 N12 W5 N14 $
FGR=[YR=2018;ORIG=0,0] W25 S25 E25 N25 $
STR=[YR=2018;ORIG=41,18] W4 N12 E4 S12 $
PTR=[ORIG=0,0] E20 W20 $
FSP=[YR=2020;ORIG=-79,-19] E41 S10 W41 N10 $
.

LAND DESCRIPTION

TOTAL OB/XF 56,995

LN	USE CODE	CLS	LAND USE DESCRIPTION	CAP	RD	LOC ZONE	FRONT	DEPTH	TOT LND UTS	UNIT TYPE	DT	DPTH FACT	% COND	TOT ADJ	UNIT PRICE	ADJ UNIT PRICE	LAND VALUE	OTHER ADJUSTMENTS AND NOTES	YEAR	DENSITY	DECL	FRZ	YR	CONSRV
1	000100	C	RES	100		OR	0.00	0.00	8.91	AC		1.00	1.00	1.00	19,000.00	19,000.00	169,290							
2	009530	C	POND	100		OR			1.50	AC		1.00	1.00	1.00	2,500.00	2,500.00	3,750							

REVIEW DATE 06/27/2025 BY WW Total Acres: 10.41 Total Land Value: 173,040 Market: 0 Agricultural: 0 Common: 173,040 PRINTED 07/09/2026 BY SYS

LOT E
IN OR 2541/573
TUPELO WOODS PB 8/64

CAUSEY JOHN & LESLEY
33298 WOODS LN
CALLAHAN, FL 32011

2026

15-1N-24-2100-000E-0000

NASSAU COUNTY PROPERTY

BUILDING CHARACTERISTICS

ELEMENT	CD	CONSTRUCTION
Exterior Wall	25	MOD METAL 100
Roof Structur	03	GABLE/HIP 100
Roof Cover	12	MODULAR MT 100
Interior Wall		N/A 100
Interior Floo	03	CONC FINSH 100
Air Condition	99	N/A 100
Heating Type		N/A 100
Bedrooms		0 100
Bathrooms		0 100
Frame	05	STEEL 100
Stories	0	0 100
Units		0 100
Occupancy	00	NONE 100
Quality	06	Quality Level 06

DOR CODE	0100	SINGLE FAMILY	
MAP NUM		MKT AREA	08
NEIGHBORHOOD/LOC	8005.00		

AREA TYPE	TOTAL GROSS AREA	PCT OF BASE	YEAR	TOT ADJ AREA	SUBAREA MARKET VALUE
BAS	1,800	100	2020	1,800	35,277
TOTALS	1,800			1,800	35,277

MARKET ADJUSTMENTS

TYPE	MDL	EFF. AREA	TOT ADJ PTS	EFF. BASE RATE	REPL. COST NEW	AYB	EYB	ECON	FNCT		NORM	% COND
6500	01	1,800	52.9000	20.63	37,134	2020	2020	0	0	0	5.00	95.00

2 GARAGE RES 100% - 2023 Heated Area: 1800 HX Base Yr 2023

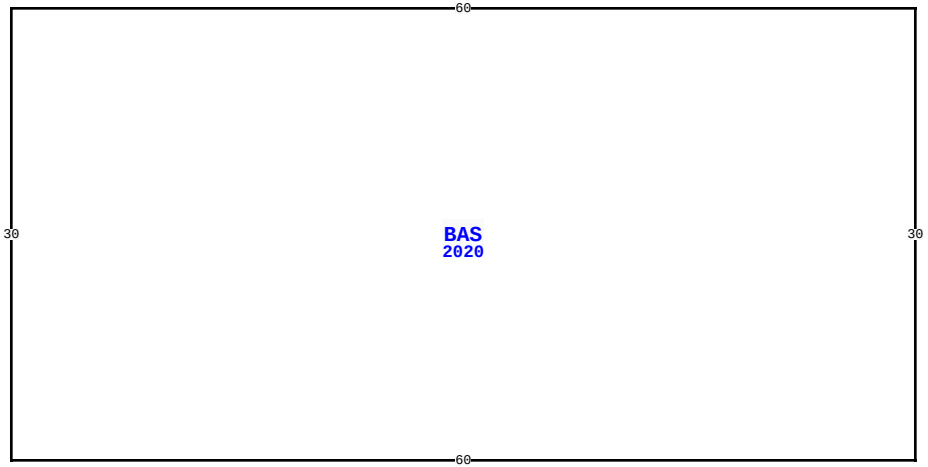

33298 WOODS LN, CALLAHAN

BLD DATE		LGL DATE	
XF DATE		LAND DATE	05/08/2026 MLU
INC DATE		AG DATE	

VALUATION SUMMARY

VALUATION BY		STANDARD
Tax Group: 6	Tax Dist:	
BUILDING MARKET VALUE		558,255
TOTAL MARKET OB/XF VALUE		56,995
TOTAL LAND VALUE - MARKET		173,040
TOTAL MARKET VALUE		788,290
SOH/AGL Deduction		398,525
ASSESSED VALUE		389,765
TOTAL EXEMPTION VALUE	HX HB	51,411
BASE TAXABLE VALUE		338,354
TOTAL JUST VALUE		788,290
NCON VALUE		0
INCOME VALUE		
PREVIOUS YEAR MKT VALUE		746,152

PERMIT NUM	DESCRIPTION	AMT	ISSUED

SALES DATA

OFF RECORD Number	DATE	TYPE INST	Q / U	V / I	RSN CD	SALE PRICE
2541/0573	2/16/2022	WD	Q	I	01	715,000
GRANTOR: HOBBY JOHN ANDREW						
GRANTEE: CAUSEY JOHN & LESLE						
1908/0232	3/11/2014	WD	Q	V	01	60,000
GRANTOR: TUPELO PLANTATION LLC						
GRANTEE: HOBBY JOHN ANDREW						

BUILDING NOTES

BUILDING DIMENSIONS

BAS=[YR=2020] W60 S30 E60 N30$.

EXTRA FEATURES

LN	OB/XF CODE	DESCRIPTION	BLD	CAP	L	W	UNITS	UT	Adj R	ADJ UNIT PRICE	ORIG COND	YEAR ON	YEAR ACTUAL	Q	% COND	OB/XF MKT VALUE	NOTES

LAND DESCRIPTION

TOTAL OB/XF 0

LN	USE CODE	CLS	LAND USE DESCRIPTION	CAP	RD	LOC ZONE	FRONT	DEPTH	TOT LND UTS	UNIT TYPE	DT	DPTH FACT	% COND	TOT ADJ	UNIT PRICE	ADJ UNIT PRICE	LAND VALUE	OTHER ADJUSTMENTS AND NOTES	YEAR	DENSITY	DECL	FRZ	YR	CONSRV

REVIEW DATE 06/27/2025 BY WW Total Acres: 10.41 Total Land Value: 173,040 Market: 0 Agricultural: 0 Common: 173,040 PRINTED 07/09/2026 BY SYS