LOT 98
HAMPTON LAKES PHASE V-B
OR 2445/712

MANGANIELLO CHARLES A & CHARLOTTE S
85704 STONEHURST PARKWAY
FERNANDINA BEACH, FL 32034

2026

13-2N-27-0724-0098-0000

NASSAU COUNTY PROPERTY

BUILDING CHARACTERISTICS

ELEMENT	CD	CONSTRUCTION
Exterior Wall	31	HARDIE BRD 100
Roof Structur	03	GABLE/HIP 100
Roof Cover	03	COMP SHNGL 100
Interior Wall	05	DRYWALL 100
Interior Floo	11	CLAY TILE 70
Interior Floo	14	CARPET 30
Air Condition	03	CENTRAL 100
Heating Type	04	AIR DUCTED 100
Bedrooms		4 100
Bathrooms		3 100
Frame	02	WOOD FRAME 100
Stories	1.	1. 100
Units		1 100
Quality	04	Quality Level 04

DOR CODE 0100 SINGLE FAMILY
MAP NUM | MKT AREA 04
NEIGHBORHOOD/LOC 4077.00

AREA TYPE	TOTAL GROSS AREA	PCT OF BASE	YEAR	TOT ADJ AREA	SUBAREA MARKET VALUE
BAS	2,399	100	2024	2,399	300,906
FGR	488	55	2024	268	33,615
FOP	100	30	2024	30	3,763
FOP	165	30	2024	50	6,271
FST	18	55	2024	10	1,255
PTO	225	5	2026	11	1,380
PTO	225	5	2026	11	1,380
TOTALS	3,620			2,779	348,569

MARKET ADJUSTMENTS

TYPE	MDL	EFF. AREA	TOT ADJ PTS	EFF. BASE RATE	REPL. COST NEW	AYB	EYB	ECON	FNCT		NORM	% COND
0100	01	2,779	120.0528	126.06	350,321	2023	2023	0	0	0	0.50	99.50

1 SINGLE FAM 100% - 2026 Heated Area: 2399 HX Base Yr 2026

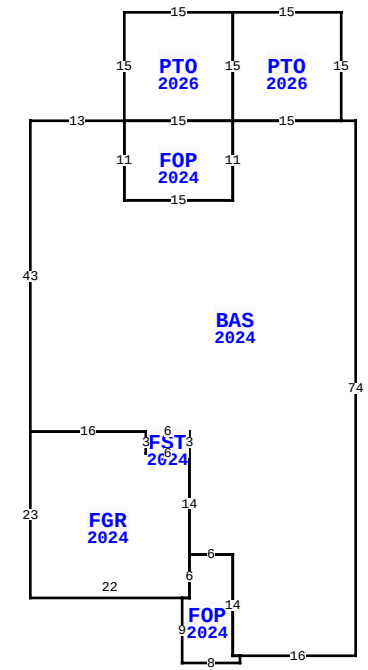

85704 STONEHURST PKWY, FERNANDINA BEACH

BLD DATE		LGL DATE	
XF DATE		LAND DATE	06/13/2023 MLU
INC DATE		AG DATE	

VALUATION SUMMARY

VALUATION BY		STANDARD
Tax Group: 4	Tax Dist:	
BUILDING MARKET VALUE		348,569
TOTAL MARKET OB/XF VALUE		4,725
TOTAL LAND VALUE - MARKET		75,000
TOTAL MARKET VALUE		428,294
SOH/AGL Deduction		255,140
ASSESSED VALUE		173,154
TOTAL EXEMPTION VALUE	HX HB	51,411
BASE TAXABLE VALUE		121,743
TOTAL JUST VALUE		428,294
NCON VALUE		7,485
INCOME VALUE		
PREVIOUS YEAR MKT VALUE		413,868

PERMIT NUM	DESCRIPTION	AMT	ISSUED
B250009564	SCRN ENCLSR	7,811	08/26/2025
230010489	CO ISSUED		08/15/2023
23002631	NEW CONSTR	443,541	02/27/2023

SALES DATA

OFF RECORD Number	DATE	TYPE INST	Q U	V I	RSN CD	SALE PRICE
2808/1384	7/25/2025	WD	Q	I	01	510,000
GRANTOR: GILBERT BUDDY ADDISON						
GRANTEE: MANGANIELLO CHARLES						
2664/1534	8/31/2023	SW	Q	I	01	472,100
GRANTOR: LENNAR HOMES LLC						
GRANTEE: GILBERT BUDDY ADDIS						

BUILDING NOTES

EXTRA FEATURES

LN	OB/XF CODE	DESCRIPTION	BLD	CAP	L	W	UNITS	UT	Adj R	ADJ UNIT PRICE	ORIG COND	YEAR ON	YEAR ACTUAL	Q	% COND	OB/XF MKT VALUE	NOTES
2	0912	SCRN RM G	0	100	15	15	225.00	SF	21.00	21.00	100	2026	2025		100	4,725	

BUILDING DIMENSIONS

BAS=[YR=2024;ORIG=45,10] W2 W15 S11 W15 N11 W13 S43 E16 E6 S3 S14 E6 S14 E1 E16 N74 $
FGR=[YR=2024;ORIG=0,53] E16 S3 E6 S14 S6 W22 N23 $
FOP=[YR=2024;ORIG=28,10] W15 S11 E15 N11 $
FOP=[YR=2024;ORIG=28,70] W6 S6 W1 S9 E8 N1 W1 N14 $
FST=[YR=2024;ORIG=22,53] W6 S3 E6 N3 $
PTO=[YR=2026;ORIG=13,-5] E15 S15 W15 N15 $
PTO=[YR=2026;ORIG=28,-5] E15 S15 W15 N15 $
.

LAND DESCRIPTION

TOTAL OB/XF 4,725

LN	USE CODE	CLS	LAND USE DESCRIPTION	CAP	RD	LOC ZONE	FRONT	DEPTH	TOT LND UTS	UNIT TYPE	DT	DPTH FACT	% COND	TOT ADJ	UNIT PRICE	ADJ UNIT PRICE	LAND VALUE	OTHER ADJUSTMENTS AND NOTES	YEAR	DENSITY	DECL	FRZ	YR	CONSRV
1	000100	C	RES	100		PUD	0.00	0.00	1.00	LT		1.00	1.00	1.00	75,000.00	75,000.00	75,000							

REVIEW DATE 01/14/2026 BY KW Total Acres: 0.00 Total Land Value: 75,000 Market: 0 Agricultural: 0 Common: 75,000 PRINTED 07/09/2026 BY SYS