LOT 76
HAMPTON LAKES #1 PB 7/252

THERRIEN JEFFERY LOGAN & LINH
85632 BERRYESSA WAY
FERNANDINA BEACH, FL 32034

2026

13-2N-27-0720-0076-0000

BUILDING CHARACTERISTICS

ELEMENT	CD	CONSTRUCTION
Exterior Wall	31	HARDIE BRD 100
Roof Structur	08	IRREGULAR 100
Roof Cover	03	COMP SHNGL 100
Interior Wall	05	DRYWALL 100
Interior Floo	14	CARPET 70
Interior Floo	11	CLAY TILE 30
Air Condition	03	CENTRAL 100
Heating Type	04	AIR DUCTED 100
Bedrooms		5 100
Bathrooms		3.5 100
Frame	02	WOOD FRAME 100
Stories	2.	2. 100
Units		0 100
Occupancy	00	NONE 100
Quality	02	Quality Level 02

DOR CODE 0100 SINGLE FAMILY
MAP NUM | MKT AREA 04
NEIGHBORHOOD/LOC 4077.00

AREA TYPE	TOTAL GROSS AREA	PCT OF BASE	YEAR	TOT ADJ AREA	SUBAREA MARKET VALUE
BAS	1,862	100	2009	1,862	239,124
FGR	462	55	2009	254	32,620
FOP	84	30	2009	25	3,211
FOP	185	30	2009	56	7,192
FUS	1,205	100	2009	1,205	154,750
TOTALS	3,798			3,402	436,894

MARKET ADJUSTMENTS

TYPE	MDL	EFF. AREA	TOT ADJ PTS	EFF. BASE RATE	REPL. COST NEW	AYB	EYB	ECON	FNCT		NORM	% COND
0900	01	3,402	100.4226	139.59	474,885	2008	2008	0	0	0	8.00	92.00

1 SNGL FAM 100% - 2024 Heated Area: 3067 HX Base Yr

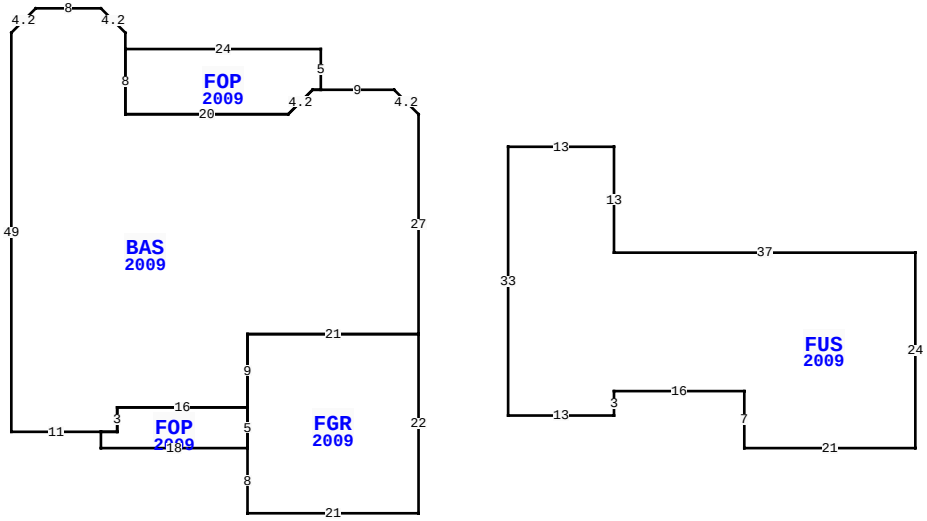

BLD DATE		LGL DATE	
XF DATE		LAND DATE	06/13/2023 MLU
INC DATE		AG DATE	

85632 BERRYESSA WAY, FERNANDINA BEACH

NASSAU COUNTY PROPERTY

PAGE 1 of 1 4

VALUATION SUMMARY

VALUATION BY		STANDARD
Tax Group: 4	Tax Dist:	
BUILDING MARKET VALUE		436,894
TOTAL MARKET OB/XF VALUE		77,900
TOTAL LAND VALUE - MARKET		75,000
TOTAL MARKET VALUE		589,794
SOH/AGL Deduction		0
ASSESSED VALUE		589,794
TOTAL EXEMPTION VALUE	13	589,794
BASE TAXABLE VALUE		0
TOTAL JUST VALUE		589,794
NCON VALUE		0
INCOME VALUE		
PREVIOUS YEAR MKT VALUE		606,157

PERMIT NUM	DESCRIPTION	AMT	ISSUED
SP240007639	NEW INGROUND SWIM	109,415	06/27/2024
E21210	ELEC OTHER	2,000	09/01/2008
M14147	MECH OTHER	0	09/01/2008
R11473	REPAIR/RRF	6,390	08/01/2008
B21788	NEW CONSTR	247,896	08/01/2008
P13416	OTHER	0	08/01/2008

SALES DATA

OFF RECORD Number	DATE	TYPE INST	Q / U	V / I	RSN CD	SALE PRICE
2441/1425	3/05/2021	WD	Q	I	01	412,000
GRANTOR: LAWSER PHILIP K SR &						
GRANTEE: THERRIEN JEFFERY LO						
1600/0052	12/23/2008	WD	Q	I	01	342,900
GRANTOR: WOODSIDE AMELIA LAKES						
GRANTEE: LAWSER PHILIP K SR						

BUILDING NOTES

EXTRA FEATURES

LN	OB/XF CODE	DESCRIPTION	BLD	CAP	L	W	UNITS	UT	Adj R	ADJ UNIT PRICE	ORIG COND	YEAR ON	YEAR ACTUAL	Q	% COND	OB/XF MKT VALUE	NOTES
1	0500	FP-PRE FAB	0	100	0	0	1.00	UT	3,500.00	3,500.00	100	2008	2008	3	90	3,150	
6	0912	SCRN RM G	0	100	0	0	1,215.00	SF	21.00	21.00	100	2025	2024		97	24,750	
7	0860	POOL/SPA	0	100	0	0	1.00	UT	50,000.00	50,000.00	100	2025	2024	04	100	50,000	

BUILDING DIMENSIONS

BAS=[YR=2009;ORIG=0,0] U3L3 W9 W1 D3L3 W20 N8 N2 U3L3 W8 D3L3 S49 E11 E2 N3 E16 N9 E21 N27 $
FUS=[YR=2009;ORIG=11,4] E13 S13 E37 S24 W21 N7 W16 S3 W13 N33 $
FGR=[YR=2009;ORIG=-21,41] S8 E21 N22 W21 S9 S5 $
FOP=[YR=2009;ORIG=-12,-3] N5 W24 S8 E20 U3R3 E1 $
FOP=[YR=2009;ORIG=-39,39] S2 E18 N5 W16 S3 W2 $
.

LAND DESCRIPTION

TOTAL OB/XF 77,900

LN	USE CODE	CLS	LAND USE DESCRIPTION	CAP	RD	LOC ZONE	FRONT	DEPTH	TOT LND UTS	UNIT TYPE	DT	DPTH FACT	% COND	TOT ADJ	UNIT PRICE	ADJ UNIT PRICE	LAND VALUE	OTHER ADJUSTMENTS AND NOTES	YEAR	DENSITY	DECL	FRZ	YR	CONSRV
1	000134	C	RES POND	100		PUD	0.00	0.00	1.00	LT		1.00	1.00	1.00	75,000.00	75,000.00	75,000							

REVIEW DATE 01/15/2025 BY KWX Total Acres: 0.00 Total Land Value: 75,000 Market: 0 Agricultural: 0 Common: 75,000 PRINTED 07/09/2026 BY SYS