PT OF LOT 15 OF SUB OF SO PT
SEC 12 DBK 39/292 & PT OF
THOMAS SAUREZ GRANT

GECKO DECO L LC
2295 OCEAN SIDE COURT
ATLANTIC BEACH, FL 32233

2026

12-2N-28-0000-0006-0020

NASSAU COUNTY PROPERTY

BUILDING CHARACTERISTICS

ELEMENT	CD	CONSTRUCTION
Exterior Wall	04	SINGLE SID 100
Roof Structur	04	WOOD TRUSS 100
Roof Cover	12	MODULAR MT 100
Interior Wall	05	DRYWALL 100
Interior Floo	11	CLAY TILE 60
Interior Floo	14	CARPET 40
Ceiling	01	FIN.SUSPD 100
Air Condition	03	CENTRAL 100
Heating Type	04	AIR DUCTED 100
Fixtures		5 100
Frame	02	WOOD FRAME 100
Story Height		9 100
RMS		5 100
Stories	2.	2. 100
Units		0 100
BUD8 Adjustme	05	DIST 1A 100
Occupancy	00	NONE 100
Quality	02	Quality Level 02
DOR CODE	1200	STORE/OFFICE/RES
MAP NUM		MKT AREA 03
NEIGHBORHOOD/LOC	3016.00	

AREA TYPE	TOTAL GROSS AREA	PCT OF BASE	YEAR	TOT ADJ AREA	SUBAREA MARKET VALUE
AOF	320	100	1993	320	15,666
AOF	601	100	1993	601	29,422
BAS	1,411	100	1993	1,411	69,077
BAS	120	100	2011	120	5,875
FOP	100	30	1993	30	1,469
FOP	104	30	1993	31	1,518
UOP	72	20	1993	14	685
UOP	100	20	1993	20	979
UST	390	40	1993	156	7,637
TOTALS	3,218			2,703	132,328

MARKET ADJUSTMENTS

TYPE	MDL	EFF. AREA	TOT ADJ PTS	EFF. BASE RATE	REPL. COST NEW	AYB	EYB	ECON	FNCT	AP	NORM	% COND
1101	04	2,703	82.6956	122.39	330,820	1981	1981	0	0	10	50.00	40.00

1 RETAILSTOR 0% - 0 Heated Area: 2452 HX Base Yr

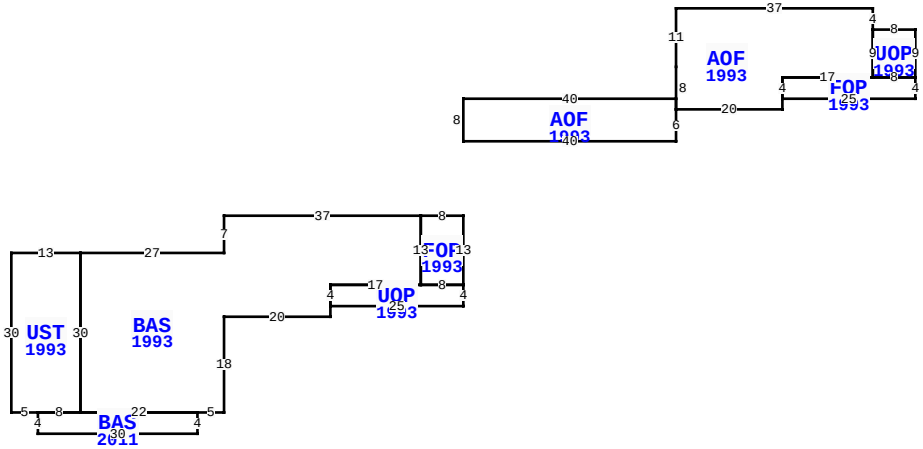

5381 S FLETCHER AVE, FERNANDINA BEACH

BLD DATE	07/24/2025 KW	LGL DATE	
XF DATE		LAND DATE	05/07/2026 DC
INC DATE		AG DATE	

VALUATION SUMMARY

VALUATION BY	STANDARD
Tax Group: 8	Tax Dist:
BUILDING MARKET VALUE	132,328
TOTAL MARKET OB/XF VALUE	10,770
TOTAL LAND VALUE - MARKET	318,748
TOTAL MARKET VALUE	461,846
SOH/AGL Deduction	32,638
ASSESSED VALUE	429,208
TOTAL EXEMPTION VALUE	0
BASE TAXABLE VALUE	429,208
TOTAL JUST VALUE	461,846
NCON VALUE	6,500
INCOME VALUE	
PREVIOUS YEAR MKT VALUE	384,280

PERMIT NUM	DESCRIPTION	AMT	ISSUED
SA260001187	COMM X2 WALL SIGN	3,000	02/03/2026
250003125	WALL SIGN "CHACAT	2,368	03/27/2025
2475	REMODEL	2,200	03/01/1988
4653	REMODEL	31,000	02/10/1988

SALES DATA

OFF RECORD Number	DATE	TYPE INST	Q U	V I	RSN CD	SALE PRICE
1093/0926	11/08/2002	WD	U	I	07	100
GRANTOR: HUGHES CHARLES & JANI						
GRANTEE: GECKO DECO LLC						
1081/1402	9/19/2002	WD	U	I	12	400,000
GRANTOR: HUGHES CHARLES A & JA						
GRANTEE: GECKO DECO L C						

BUILDING NOTES

EXTRA FEATURES

LN	OB/XF CODE	DESCRIPTION	BLD	CAP	L	W	UNITS	UT	Adj R	ADJ UNIT PRICE	ORIG COND	YEAR ON	YEAR ACTUAL	Q	% COND	OB/XF MKT VALUE	NOTES
1	0471	VINYL FNC	0	0	0	0	593.00	LF	16.00	16.00	100	2000	2000	3	45	4,270	
2	0855	CONC PAVER	0	0	0	0	650.00	SF	10.00	10.00	100	2026	2025		100	6,500	

BUILDING DIMENSIONS

BAS=[YR=1993;ORIG=-8,0] W37 S7 W27 S30 E22 E5 N18 E20 N2 N4 E17 N13 $
AOF=[YR=1993;ORIG=40,-28] N11 E37 S4 S9 W17 S4 S2 W20 N8 $
UST=[YR=1993;ORIG=-72,7] W13 S30 E5 E8 N30 $
AOF=[YR=1993;ORIG=0,-14] N8 E40 S2 S6 W40 $
BAS=[YR=2011;ORIG=-80,37] S4 E30 N4 W22 W8 $
FOP=[YR=1993;ORIG=0,0] W8 S13 E8 N13 $
UOP=[YR=1993;ORIG=-25,17] E25 N4 W8 W17 S4 $
FOP=[YR=1993;ORIG=85,-26] S4 W25 N4 E17 E8 $
UOP=[YR=1993;ORIG=77,-35] E8 S9 W8 N9 $
PTR=[ORIG=0,0] N20 S20 $
.

LAND DESCRIPTION

TOTAL OB/XF 10,770

LN	USE CODE	CLS	LAND USE DESCRIPTION	CAP	RD	LOC ZONE	FRONT	DEPTH	TOT LND UTS	UNIT TYPE	DT	DPTH FACT	% COND	TOT ADJ	UNIT PRICE	ADJ UNIT PRICE	LAND VALUE	OTHER ADJUSTMENTS AND NOTES	YEAR	DENSITY	DECL	FRZ	YR	CONSRV
1	001200	C	STORE COMB	0		CN	624.00	59.00	47,222.00	SF		1.00	1.00	0.45	15.00	6.75	318,748							

REVIEW DATE 07/24/2025 BY KW Total Acres: 1.09 Total Land Value: 318,748 Market: 0 Agricultural: 0 Common: 318,748 PRINTED 07/09/2026 BY SYS