LOT 385
NORTH HAMPTON PHASE 3 PB 7/16

PITTMAN STEVEN J & LAURA PLA REVOCABLE TRUST/PITTM
85055 NAPEAGUE DR
FERNANDINA BEACH, FL 32034

2026

12-2N-27-1460-0385-0000

NASSAU COUNTY PROPERTY

BUILDING CHARACTERISTICS

ELEMENT	CD	CONSTRUCTION
Exterior Wall	16	WD FR STUC 90
Exterior Wall	21	STONE 10
Roof Structur	08	IRREGULAR 100
Roof Cover	03	COMP SHNGL 100
Interior Wall	05	DRYWALL 100
Interior Floo	12	HARDWOOD 80
Interior Floo	11	CLAY TILE 20
Air Condition	03	CENTRAL 100
Heating Type	04	AIR DUCTED 100
Bedrooms		3 100
Bathrooms		3.5 100
Frame	02	WOOD FRAME 100
Stories	1.	1. 100
Units		0 100
Quality	04	Quality Level 04
DOR CODE	0100	SINGLE FAMILY
MAP NUM		MKT AREA 04
NEIGHBORHOOD/LOC	4043.00	

AREA TYPE	TOTAL GROSS AREA	PCT OF BASE	YEAR	TOT ADJ AREA	SUBAREA MARKET VALUE
BAS	3,000	100	2026	3,000	587,040
FGR	882	55	2026	485	94,905
FOP	285	30	2026	86	16,828
FOP	740	30	2026	222	43,441
TOTALS	4,907			3,793	742,214

MARKET ADJUSTMENTS

TYPE	MDL	EFF. AREA	TOT ADJ PTS	EFF. BASE RATE	REPL. COST NEW	AYB	EYB	ECON	FNCT		NORM	% COND
0900	11	3,793	140.7780	195.68	742,214	2025	2025	0	0	0	0.00	100.00

1 SNGL FAM 0% - 2026 Heated Area: 3000 HX Base Yr

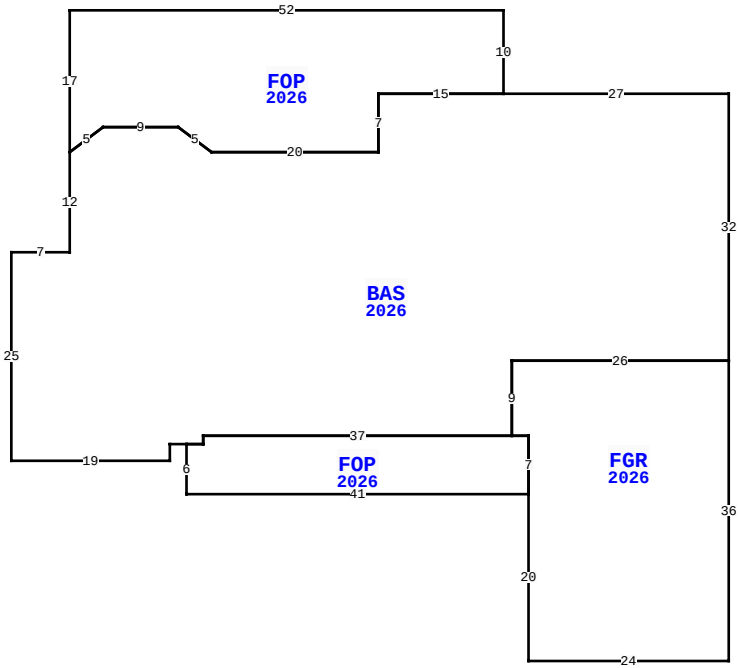

85055 NAPEAGUE DR, FERNANDINA BEACH

BLD DATE		LGL DATE	
XF DATE		LAND DATE	
INC DATE		AG DATE	

VALUATION SUMMARY

VALUATION BY	STANDARD
Tax Group: 4	Tax Dist:
BUILDING MARKET VALUE	742,214
TOTAL MARKET OB/XF VALUE	3,500
TOTAL LAND VALUE - MARKET	155,000
TOTAL MARKET VALUE	900,714
SOH/AGL Deduction	0
ASSESSED VALUE	900,714
TOTAL EXEMPTION VALUE	0
BASE TAXABLE VALUE	900,714
TOTAL JUST VALUE	900,714
NCON VALUE	745,714
INCOME VALUE	
PREVIOUS YEAR MKT VALUE	155,000

PERMIT NUM	DESCRIPTION	AMT	ISSUED
CO260004420			04/24/2026
22006131	NEW CONSTR	514,894	04/20/2022

SALES DATA

OFF RECORD Number	DATE	TYPE INST	Q U	V I	RSN CD	SALE PRICE
2865/1670	4/30/2026	WD	Q	I	01	1,050,000
GRANTOR: AMCO ENTERPRISES INC						
GRANTEE: PITTMAN STEVEN J &						
2725/77	6/28/2024	WD	Q	V	01	211,600
GRANTOR: AVENT ARTHUR W & PAME						
GRANTEE: AMCO ENTERPRISES IN						

BUILDING NOTES

BUILDING DIMENSIONS

BAS=[YR=2026;ORIG=30,10] S12 W7 S25 E19 N2 E2 E2 N1 E37 N9 E26 N32 W27 W15 S7 W20 U3L4 W9 D3L4 $
FOP=[YR=2026;ORIG=82,3] W15 S7 W20 U3L4 W9 D3L4 N17 E52 S10 $
FOP=[YR=2026;ORIG=83,44] E2 S7 W41 N6 E2 N1 E37 $
FGR=[YR=2026;ORIG=83,35] E26 S36 W24 N20 N7 W2 N9 $
.

EXTRA FEATURES

LN	OB/XF CODE	DESCRIPTION	BLD	CAP	L	W	UNITS	UT	Adj R	ADJ UNIT PRICE	ORIG COND	YEAR ON	YEAR ACTUAL	Q	% COND	OB/XF MKT VALUE	NOTES
1	0500	FP-PRE FAB	0	0	0	0	1.00	UT	3,500.00	3,500.00	100	2026	2025		100	3,500	

LAND DESCRIPTION

TOTAL OB/XF 3,500

LN	USE CODE	CLS	LAND USE DESCRIPTION	CAP	RD	LOC ZONE	FRONT	DEPTH	TOT LND UTS	UNIT TYPE	DT	DPTH FACT	% COND	TOT ADJ	UNIT PRICE	ADJ UNIT PRICE	LAND VALUE	OTHER ADJUSTMENTS AND NOTES	YEAR	DENSITY	DECL	FRZ	YR	CONSRV
1	000140	C	RES GOLF	0		PUD	0.00	0.00	1.00	LT		1.00	1.00	1.00	155,000.00	155,000.00	155,000							

REVIEW DATE 01/13/2026 BY KW Total Acres: 0.00 Total Land Value: 155,000 Market: 0 Agricultural: 0 Common: 155,000 PRINTED 07/09/2026 BY SYS