LOT 297
NORTH HAMPTON PHASE 1 PB 6/215

HOUSER JOHN DAVID & DONNA LYNN
85246 SHINNECOCK DRIVE
FERNANDINA BEACH, FL 32034

2026

12-2N-27-1460-0297-0000

NASSAU COUNTY PROPERTY

BUILDING CHARACTERISTICS

ELEMENT	CD	CONSTRUCTION
Exterior Wall	16	WD FR STUC 100
Roof Structur	08	IRREGULAR 100
Roof Cover	03	COMP SHNGL 100
Interior Wall	05	DRYWALL 100
Interior Floo	12	HARDWOOD 80
Interior Floo	11	CLAY TILE 20
Air Condition	03	CENTRAL 100
Heating Type	04	AIR DUCTED 100
Bedrooms		3 100
Bathrooms		2.5 100
Frame	02	WOOD FRAME 100
Stories	2.	2. 100
Units		0 100
Occupancy	00	NONE 100
Quality	03	Quality Level 03
DOR CODE	0100	SINGLE FAMILY
MAP NUM		MKT AREA 04
NEIGHBORHOOD/LOC	4043.00	

AREA TYPE	TOTAL GROSS AREA	PCT OF BASE	YEAR	TOT ADJ AREA	SUBAREA MARKET VALUE
BAL	126	15	2004	19	2,669
BAS	1,575	100	2004	1,575	221,213
FGR	518	55	2004	285	40,029
FOP	36	30	2004	11	1,545
FSP	84	40	2004	34	4,776
FUS	596	100	2004	596	83,709
PTO	156	5	2025	8	1,123
TOTALS	3,091			2,528	355,064

MARKET ADJUSTMENTS

TYPE	MDL	EFF. AREA	TOT ADJ PTS	EFF. BASE RATE	REPL. COST NEW	AYB	EYB	ECON	FNCT		NORM	% COND
0900	01	2,528	112.8960	156.93	396,719	2004	2004	0	0	0	10.50	89.50

1 SNGL FAM 100% - 2024 Heated Area: 2171 HX Base Yr 2024

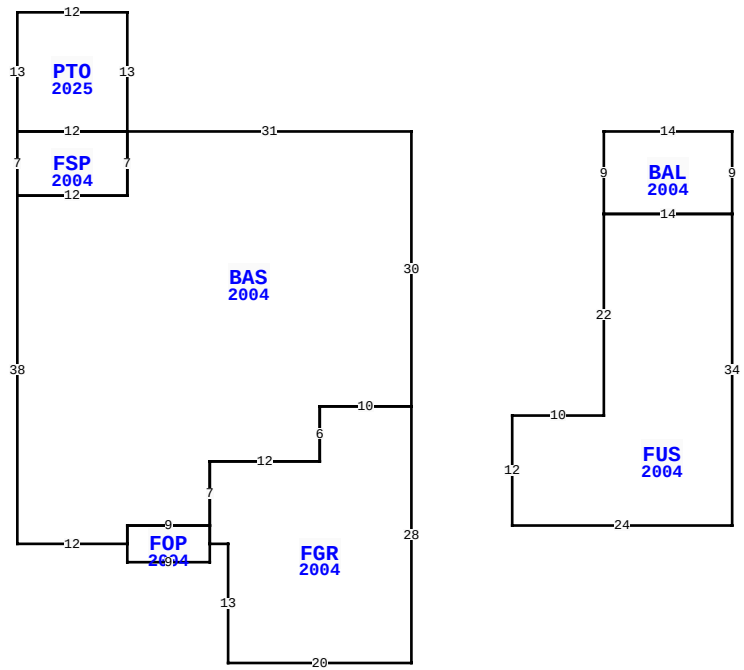

85246 SHINNECOCK HILLS DR, FERNANDINA BEACH

BLD DATE	03/29/2023 NW	LGL DATE	
XF DATE		LAND DATE	
INC DATE		AG DATE	

VALUATION SUMMARY

VALUATION BY		STANDARD
Tax Group: 4	Tax Dist:	
BUILDING MARKET VALUE		355,064
TOTAL MARKET OB/XF VALUE		5,734
TOTAL LAND VALUE - MARKET		127,500
TOTAL MARKET VALUE		488,298
SOH/AGL Deduction		0
ASSESSED VALUE		488,298
TOTAL EXEMPTION VALUE	HX HB	51,411
BASE TAXABLE VALUE		436,887
TOTAL JUST VALUE		488,298
NCON VALUE		0
INCOME VALUE		
PREVIOUS YEAR MKT VALUE		507,052

PERMIT NUM	DESCRIPTION	AMT	ISSUED
B240005124	BUILD 12 X 13' SC	9,000	04/29/2024
20008713	REPAIR/RRF	20,000	10/12/2020
19003871	REPAIR/RRF	0	05/08/2019

SALES DATA

OFF RECORD Number	DATE	TYPE INST	Q / U	V / I	RSN CD	SALE PRICE
2586/1158	8/12/2022	WD	Q	I	02	549,000
GRANTOR: PAULSEN BEVERLY E						
GRANTEE: HOUSER JOHN DAVID &						
1565/0050	5/06/2008	WD	Q	I		297,000
GRANTOR: FREEMAN DONALD D & CL						
GRANTEE: PAULSEN BEVERLY E						

BUILDING NOTES

BUILDING DIMENSIONS

BAS=[YR=2004;ORIG=0,0] W31 S7 W12 S38 E12 N2 E9 N7 E12 N6 E10 N30 $
FUS=[YR=2004;ORIG=35,9] S34 W24 N12 E10 N22 E14 $
FGR=[YR=2004;ORIG=-22,45] E2 S13 E20 N28 W10 S6 W12 S7 S2 $
PTO=[YR=2025;ORIG=-43,0] E12 N13 W12 S13 $
BAL=[YR=2004;ORIG=21,0] E14 S9 W14 N9 $
FSP=[YR=2004;ORIG=-31,0] W12 S7 E12 N7 $
FOP=[YR=2004;ORIG=-31,45] S2 E9 N2 N2 W9 S2 $
PTR=[ORIG=0,0] E15 W15 $
.

EXTRA FEATURES

LN	OB/XF CODE	DESCRIPTION	BLD	CAP	L	W	UNITS	UT	Adj R	ADJ UNIT PRICE	ORIG COND	YEAR ON	YEAR ACTUAL	Q	% COND	OB/XF MKT VALUE	NOTES
1	0500	FP-PRE FAB	0	100	0	0	1.00	UT	3,500.00	3,500.00	100	2004	2004	3	86	3,010	
3	0911	SCRN RM A	0	100	12	13	156.00	SF	18.00	18.00	100	2025	2024		97	2,724	

LAND DESCRIPTION

TOTAL OB/XF 5,734

LN	USE CODE	CLS	LAND USE DESCRIPTION	CAP	RD	LOC ZONE	FRONT	DEPTH	TOT LND UTS	UNIT TYPE	DT	DPTH FACT	% COND	TOT ADJ	UNIT PRICE	ADJ UNIT PRICE	LAND VALUE	OTHER ADJUSTMENTS AND NOTES	YEAR	DENSITY	DECL	FRZ	YR	CONSRV
1	000134	C	RES POND	100		PUD	0.00	0.00	1.00	LT		1.00	1.00	1.00	127,500.00	127,500.00	127,500							

REVIEW DATE 07/02/2024 BY KW Total Acres: 0.00 Total Land Value: 127,500 Market: 0 Agricultural: 0 Common: 127,500 PRINTED 07/09/2026 BY SYS