LOT 274
IN OR 2238/436
NORTH HAMPTON PHASE 1 PB 6/215

PALSHA RICHARD & KATHY O L/E/
85001 WAINSCOTT CT
FERNANDINA BEACH, FL 32034

2026

12-2N-27-1460-0274-0000

NASSAU COUNTY PROPERTY

BUILDING CHARACTERISTICS

ELEMENT	CD	CONSTRUCTION
Exterior Wall	16	WD FR STUC 100
Roof Structur	08	IRREGULAR 100
Roof Cover	03	COMP SHNGL 100
Interior Wall	05	DRYWALL 100
Interior Floo	11	CLAY TILE 80
Interior Floo	14	CARPET 20
Air Condition	03	CENTRAL 100
Heating Type	04	AIR DUCTED 100
Bedrooms		3 100
Bathrooms		3 100
Frame	02	WOOD FRAME 100
Stories	2.	2. 100
Units		0 100
Occupancy	00	NONE 100
Quality	03	Quality Level 03

DOR CODE 0100 SINGLE FAMILY
MAP NUM | MKT AREA 04
NEIGHBORHOOD/LOC 4043.00

AREA TYPE	TOTAL GROSS AREA	PCT OF BASE	YEAR	TOT ADJ AREA	SUBAREA MARKET VALUE
BAL	120	15	2004	18	2,708
BAS	1,366	100	2004	1,366	205,514
FGR	486	55	2004	267	40,170
FOP	30	30	2004	9	1,354
FSP	104	40	2015	42	6,319
FUS	632	100	2004	632	95,084
PTO	144	5	2025	7	1,053
PTO	234	5	2025	12	1,805
UOP	120	20	2004	24	3,610
TOTALS	3,236			2,377	357,619

MARKET ADJUSTMENTS

TYPE	MDL	EFF. AREA	TOT ADJ PTS	EFF. BASE RATE	REPL. COST NEW	AYB	EYB	ECON	FNCT		NORM	% COND
0900	01	2,377	120.9320	168.10	399,574	2004	2004	0	0	0	10.50	89.50

1 SNGL FAM 100% - 2014 Heated Area: 1998 HX Base Yr 2014

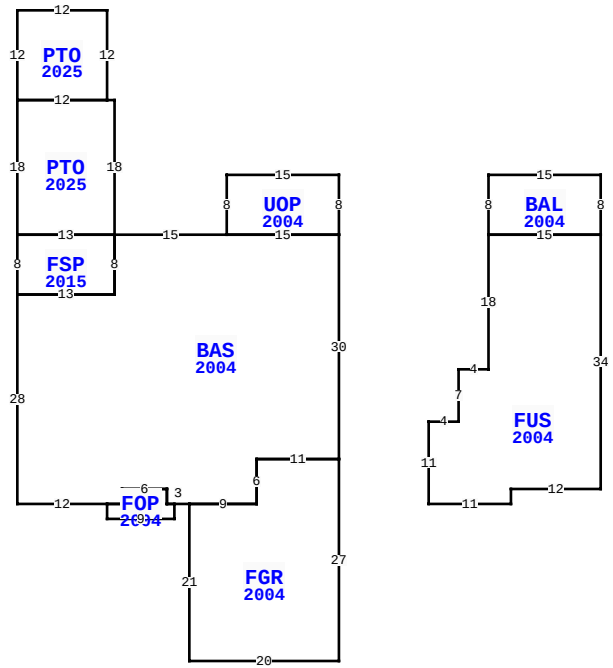

85001 WAINSCOTT CT, FERNANDINA BEACH

BLD DATE		LGL DATE	
XF DATE		LAND DATE	
INC DATE		AG DATE	

VALUATION SUMMARY

VALUATION BY		STANDARD
Tax Group: 4	Tax Dist:	
BUILDING MARKET VALUE		357,619
TOTAL MARKET OB/XF VALUE		7,096
TOTAL LAND VALUE - MARKET		127,500
TOTAL MARKET VALUE		492,215
SOH/AGL Deduction		217,123
ASSESSED VALUE		275,092
TOTAL EXEMPTION VALUE	HX HB	51,411
BASE TAXABLE VALUE		223,681
TOTAL JUST VALUE		492,215
NCON VALUE		0
INCOME VALUE		
PREVIOUS YEAR MKT VALUE		498,331

PERMIT NUM	DESCRIPTION	AMT	ISSUED
B240010059	18X13 SCREEN ENCL	14,200	08/29/2024

SALES DATA

OFF RECORD Number	DATE	TYPE INST	Q / U	V / I	RSN CD	SALE PRICE
2238/0436	11/12/2018	LE	U	I	11	100
GRANTOR: PALSHA RICHARD & KATH						
GRANTEE: PALSHA RICHARD & KA						
1792/0694	5/02/2012	WD	Q	I	02	235,300
GRANTOR: RODGERS WILLIAM H & J						
GRANTEE: PALSHA RICHARD & KA						

BUILDING NOTES

EXTRA FEATURES

LN	OB/XF CODE	DESCRIPTION	BLD	CAP	L	W	UNITS	UT	Adj R	ADJ UNIT PRICE	ORIG COND	YEAR ON	YEAR ACTUAL	Q	% COND	OB/XF MKT VALUE	NOTES
1	0500	FP-PRE FAB	0	100	0	0	1.00	UT	3,500.00	3,500.00	100	2004	2004	3	86	3,010	
4	0911	SCRN RM A	0	100	18	13	234.00	SF	18.00	18.00	100	2025	2024		97	4,086	

BUILDING DIMENSIONS

BAS=[YR=2004;ORIG=-15,8] W15 S8 W13 S28 E12 E2 N2 E6 S2 E3 E9 N6 E11 N30 W15 $
FUS=[YR=2004;ORIG=12,33] E4 N7 E4 N18 E15 S34 W12 S2 W11 N11 $
FGR=[YR=2004;ORIG=-20,44] S21 E20 N27 W11 S6 W9 $
PTO=[YR=2025;ORIG=-43,8] E13 N18 W1 W12 S18 $
PTO=[YR=2025;ORIG=-43,-22] E12 S12 W12 N12 $
UOP=[YR=2004;ORIG=0,0] W15 S8 E15 N8 $
BAL=[YR=2004;ORIG=20,8] N8 E15 S8 W15 $
FSP=[YR=2015;ORIG=-30,8] W13 S8 E13 N8 $
FOP=[YR=2004;ORIG=-31,44] S2 E9 N2 W1 N2 W6 S2 W2 $
.

LAND DESCRIPTION

TOTAL OB/XF 7,096

LN	USE CODE	CLS	LAND USE DESCRIPTION	CAP	RD	LOC ZONE	FRONT	DEPTH	TOT LND UTS	UNIT TYPE	DT	DPTH FACT	% COND	TOT ADJ	UNIT PRICE	ADJ UNIT PRICE	LAND VALUE	OTHER ADJUSTMENTS AND NOTES	YEAR	DENSITY	DECL	FRZ	YR	CONSRV
1	000134	C	RES POND	100		PUD	0.00	0.00	1.00	LT		1.00	1.00	1.00	127,500.00	127,500.00	127,500							

REVIEW DATE 12/26/2024 BY KWA Total Acres: 0.00 Total Land Value: 127,500 Market: 0 Agricultural: 0 Common: 127,500 PRINTED 07/09/2026 BY SYS