LOT 249
NORTH HAMPTON PHASE 1 PB 6/215

MORICONI D&G REVOCABLE LIVING TRUST/MORICONI DAVID
85506 BOSTICK WOOD DRIVE
FERNANDINA BEACH, FL 32034

2026

12-2N-27-1460-0249-0000

BUILDING CHARACTERISTICS

ELEMENT	CD	CONSTRUCTION
Exterior Wall	16	WD FR STUC 100
Roof Structur	08	IRREGULAR 100
Roof Cover	03	COMP SHNGL 100
Interior Wall	05	DRYWALL 100
Interior Floo	11	CLAY TILE 50
Interior Floo	14	CARPET 50
Air Condition	03	CENTRAL 100
Heating Type	04	AIR DUCTED 100
Bedrooms		5 100
Bathrooms		3.5 100
Frame	02	WOOD FRAME 100
Stories	2.	2. 100
Units		0 100
Occupancy	00	NONE 100
Quality	03	Quality Level 03

DOR CODE	0100	SINGLE FAMILY	
MAP NUM		MKT AREA	04
NEIGHBORHOOD/LOC	4043.00		

AREA TYPE	TOTAL GROSS AREA	PCT OF BASE	YEAR	TOT ADJ AREA	SUBAREA MARKET VALUE
BAS	1,397	100	2007	1,397	186,864
FGR	711	55	2007	391	52,300
FOP	176	30	2007	53	7,089
FSP	120	40	2010	48	6,421
FUS	1,580	100	2007	1,580	211,342
USP	100	30	2010	30	4,013
USP	244	30	2013	73	9,764
TOTALS	4,328			3,572	477,794

MARKET ADJUSTMENTS

TYPE	MDL	EFF. AREA	TOT ADJ PTS	EFF. BASE RATE	REPL. COST NEW	AYB	EYB	ECON	FNCT		NORM	% COND
0900	01	3,572	105.7500	146.99	525,048	2007	2007	0	0	0	9.00	91.00

1 SNGL FAM 100% - 2008 Heated Area: 2977 HX Base Yr 2008

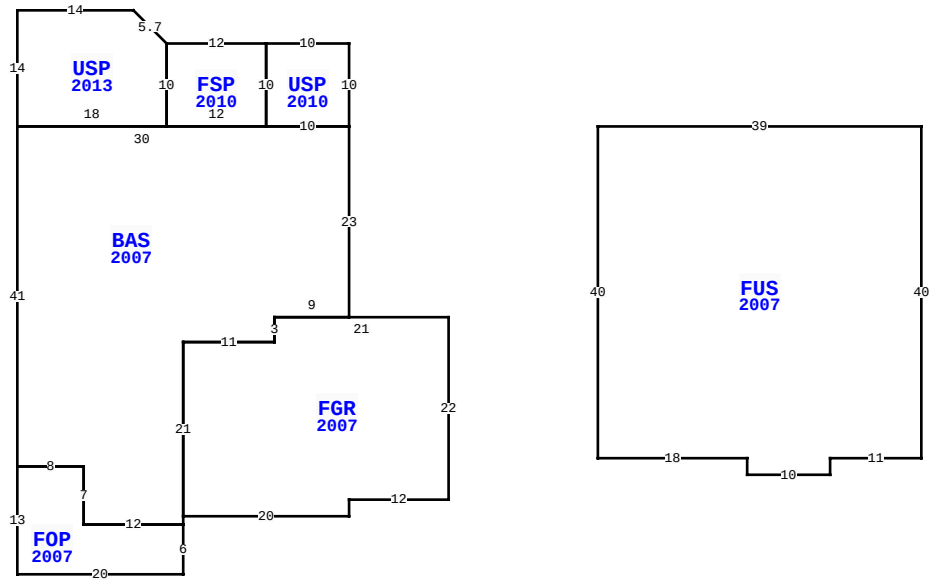

85506 BOSTICK WOOD DR, FERNANDINA BEACH

BLD DATE	03/29/2023	NW	LGL DATE		
XF DATE	11/26/2007	RK	LAND DATE		
INC DATE			AG DATE		

NASSAU COUNTY PROPERTY

PAGE 1 of 1 4

VALUATION SUMMARY

VALUATION BY		STANDARD
Tax Group: 4	Tax Dist:	
BUILDING MARKET VALUE		477,794
TOTAL MARKET OB/XF VALUE		48,687
TOTAL LAND VALUE - MARKET		127,500
TOTAL MARKET VALUE		653,981
SOH/AGL Deduction		279,583
ASSESSED VALUE		374,398
TOTAL EXEMPTION VALUE	HX HB	51,411
BASE TAXABLE VALUE		322,987
TOTAL JUST VALUE		653,981
NCON VALUE		0
INCOME VALUE		
PREVIOUS YEAR MKT VALUE		669,900

PERMIT NUM	DESCRIPTION	AMT	ISSUED
B1530267	SWIM POOL	36,000	04/01/2015
B1327361	SCRN RM	5,078	06/01/2013
B1226607	XFOB	4,800	11/01/2012
B23605	XFOB	1,780	05/01/2010
B20209	ADDITION	18,579	07/01/2007
E18280	ELEC OTHER	2,200	11/01/2006

SALES DATA

OFF RECORD Number	DATE	TYPE INST	Q / U	V / I	RSN CD	SALE PRICE
2863/1280	4/23/2026	WD	U	I	11	100
GRANTOR: MORICONI DAVID Y & GA						
GRANTEE: MORICONI D&G REVOCA						
1475/0239	1/30/2007	WD	Q	I		445,600
GRANTOR: RICHMOND AMERICAN HOM						
GRANTEE: MORICONI DAVID & GA						

BUILDING NOTES

BUILDING DIMENSIONS

USP=[YR=2010] N10 W10 S10 E10$ BAS=[YR=2007] W10 FSP=[YR=2010] N10 W12 USP=[YR=2013] U4 L4 W14 S14 E18 N10 $ S10 E12 $ W30 S41 FOP=[YR=2007] S13E20 N6 W12 N7 W8 $ E8 S7 E12 N1 FGR=[YR=2007] E20 N2 E12 N22 W21S3 W11 S21 $ N21 E11 N3 E9 N23$ PTR= E30 FUS=[YR=2007] E39 S40 W11 S2 W10 N2 W18 N40 $ W30 $.

EXTRA FEATURES

LN	OB/XF CODE	DESCRIPTION	BLD	CAP	L	W	UNITS	UT	Adj R	ADJ UNIT PRICE	ORIG COND	YEAR ON	YEAR ACTUAL	Q	% COND	OB/XF MKT VALUE	NOTES
1	0500	FP-PRE FAB	0	100	0	0	1.00	UT	3,500.00	3,500.00	100	2007	2007	3	89	3,115	
6	0860	POOL/SPA	0	100	0	0	1.00	UT	50,000.00	50,000.00	100	2015	2015	04	90	45,000	
8	1126	CB/STC 8"	0	100	19	4	76.00	SF	8.00	8.00	100	2015	2015	3	94	572	

LAND DESCRIPTION

TOTAL OB/XF 48,687

LN	USE CODE	CLS	LAND USE DESCRIPTION	CAP	RD	LOC ZONE	FRONT	DEPTH	TOT LND UTS	UNIT TYPE	DT	DPTH FACT	% COND	TOT ADJ	UNIT PRICE	ADJ UNIT PRICE	LAND VALUE	OTHER ADJUSTMENTS AND NOTES	YEAR	DENSITY	DECL	FRZ	YR	CONSRV
1	000135	C	RES NATURAL	100		PUD	0.00	0.00	1.00	LT		1.00	1.00	1.00	127,500.00	127,500.00	127,500							

REVIEW DATE 01/01/2023 BY CD Total Acres: 0.00 Total Land Value: 127,500 Market: 0 Agricultural: 0 Common: 127,500 PRINTED 07/09/2026 BY SYS