LOT 225
NORTH HAMPTON PHASE 1 PB 6/215

MCGUINNES DAVID M & JULIET A L/E/
85589 BOSTICK WOOD DR
FERNANDINA BEACH, FL 32034

**2026**

**12-2N-27-1460-0225-0000**

## NASSAU COUNTY PROPERTY



## BUILDING CHARACTERISTICS

| ELEMENT | CD | CONSTRUCTION |
|---|---|---|
| Exterior Wall | 16 | WD FR STUC 100 |
| Roof Structur | 08 | IRREGULAR 100 |
| Roof Cover | 03 | COMP SHNGL 100 |
| Interior Wall | 05 | DRYWALL 100 |
| Interior Floo | 14 | CARPET 70 |
| Interior Floo | 11 | CLAY TILE 30 |
| Air Condition | 03 | CENTRAL 100 |
| Heating Type | 04 | AIR DUCTED 100 |
| Bedrooms | | 5 100 |
| Bathrooms | | 4 100 |
| Frame | 02 | WOOD FRAME 100 |
| Stories | 1.5 | 1.5 100 |
| Units | | 0 100 |
| Occupancy | 00 | NONE 100 |
| Quality | 03 | Quality Level 03 |
| DOR CODE | 0100 | SINGLE FAMILY |
| MAP NUM | | MKT AREA 04 |
| NEIGHBORHOOD/LOC | 4043.00 | |

| AREA TYPE | TOTAL GROSS AREA | PCT OF BASE | YEAR | TOT ADJ AREA | SUBAREA MARKET VALUE |
|---|---|---|---|---|---|
| BAS | 2,698 | 100 | 2006 | 2,698 | 343,180 |
| FGR | 704 | 55 | 2006 | 387 | 49,226 |
| FOP | 93 | 30 | 2006 | 28 | 3,561 |
| FSP | 514 | 40 | 2006 | 206 | 26,202 |
| FST | 83 | 55 | 2006 | 46 | 5,851 |
| FUS | 646 | 100 | 2006 | 646 | 82,169 |
| TOTALS | 4,738 | | | 4,011 | 510,190 |

## MARKET ADJUSTMENTS

| TYPE | MDL | EFF. AREA | TOT ADJ PTS | EFF. BASE RATE | REPL. COST NEW | AYB | EYB | ECON | FNCT | | NORM | % COND |
|---|---|---|---|---|---|---|---|---|---|---|---|---|
| 0900 | 01 | 4,011 | 101.1120 | 140.55 | 563,746 | 2006 | 2006 | 0 | 0 | 0 | 9.50 | 90.50 |

1 SNGL FAM 100% - 2016 Heated Area: 3344 HX Base Yr 2016

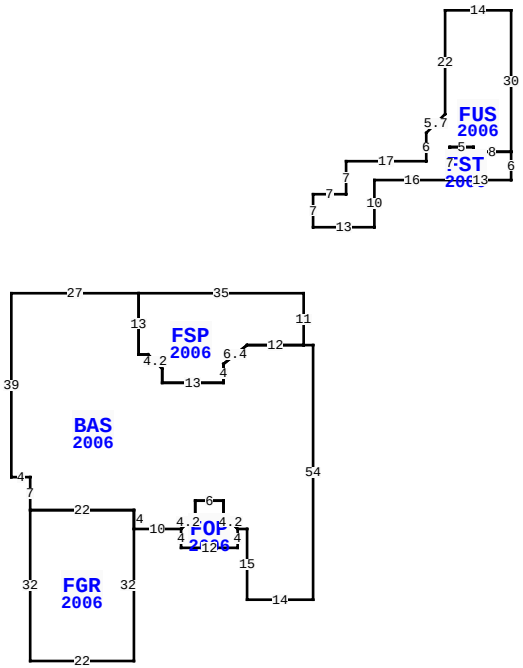


85589 BOSTICK WOOD DR, FERNANDINA BEACH

| | | | |
|---|---|---|---|
| BLD DATE | 03/29/2023 | NW | LGL DATE |
| XF DATE | | | LAND DATE |
| INC DATE | | | AG DATE |

## VALUATION SUMMARY

| | | |
|---|---|---|
| VALUATION BY | | STANDARD |
| Tax Group: 4 | Tax Dist: | |
| BUILDING MARKET VALUE | | 510,190 |
| TOTAL MARKET OB/XF VALUE | | 49,290 |
| TOTAL LAND VALUE - MARKET | | 127,500 |
| TOTAL MARKET VALUE | | 686,980 |
| SOH/AGL Deduction | | 252,063 |
| ASSESSED VALUE | | 434,917 |
| TOTAL EXEMPTION VALUE | HX HB | 51,411 |
| BASE TAXABLE VALUE | | 383,506 |
| TOTAL JUST VALUE | | 686,980 |
| NCON VALUE | | 0 |
| INCOME VALUE | | |
| PREVIOUS YEAR MKT VALUE | | 681,103 |

| PERMIT NUM | DESCRIPTION | AMT | ISSUED |
|---|---|---|---|
| B21060 | SCRN ENCLOSURE | 4,977 | 02/01/2008 |
| B20921 | SWIM POOL | 48,800 | 01/01/2008 |
| M10705 | MECH OTHER | 0 | 11/01/2005 |
| E15554 | ELEC OTHER | 1,500 | 08/01/2005 |
| P09931 | OTHER | 0 | 08/01/2005 |
| C15667 | CO ISSUED | 440,400 | 07/01/2005 |

## SALES DATA

| OFF RECORD Number | DATE | TYPE INST | Q U | V I | RSN CD | SALE PRICE |
|---|---|---|---|---|---|---|
| 2724/7 | 7/01/2024 | LE | U | I | 11 | 100 |
| GRANTOR: MCGUINNES DAVID M & J | | | | | | |
| GRANTEE: MCGUINNES LIAM P | | | | | | |
| 1996/0395 | 8/07/2015 | WD | Q | I | 02 | 430,000 |
| GRANTOR: SHOUGH DENNA W & RAYM | | | | | | |
| GRANTEE: MCGUINNES DAVID M & | | | | | | |

## BUILDING NOTES

## BUILDING DIMENSIONS

BAS=[YR=2006] W2 FSP=[YR=2006] N11 W35 S13 E2 D3 R3 S3 E13 N4 R5 U4 E12$ W12 D4 L5 S4 W13 N3 L3 U3 W2 N13 W27 S39 E4 S7 FGR=[YR=2006] S32 E22 N32 W22$ E22 S4 E10 FOP=[YR=2006] S4 E12 N4 L3 U3 N3 W6 S3 D3 L3 $ R3 U3 N3 E6 S3 D3 R3 E2 S15 E14 N54$ PTR=N25 FUS=[YR=2006] N7 E7 N7 E17 N6 R4 U4 N22 E14 S30 FST=[YR=2006] S6 W13 N7 E5 S1 E8$ W8 N1 W5 S7 W16 S10 W13$ S25$.

## EXTRA FEATURES

| LN | OB/XF CODE | DESCRIPTION | BLD | CAP | L | W | UNITS | UT | Adj R | ADJ UNIT PRICE | ORIG COND | YEAR ON | YEAR ACTUAL | Q | % COND | OB/XF MKT VALUE | NOTES |
|---|---|---|---|---|---|---|---|---|---|---|---|---|---|---|---|---|---|
| 1 | 0504 | FP-ELECTRI | 0 | 100 | 0 | 0 | 1.00 | UT | 2,000.00 | 2,000.00 | 100 | 2006 | 2006 | 3 | 88 | 1,760 | |
| 3 | 0860 | POOL/SPA | 0 | 100 | 0 | 0 | 1.00 | UT | 50,000.00 | 50,000.00 | 100 | 2008 | 2008 | 04 | 85 | 42,500 | |
| 4 | 0911 | SCRN RM A | 0 | 100 | 0 | 0 | 1,035.00 | SF | 18.00 | 18.00 | 100 | 2008 | 2008 | 3 | 27 | 5,030 | |

## LAND DESCRIPTION

TOTAL OB/XF 49,290

| LN | USE CODE | CLS | LAND USE DESCRIPTION | CAP | RD | LOC ZONE | FRONT | DEPTH | TOT LND UTS | UNIT TYPE | DT | DPTH FACT | % COND | TOT ADJ | UNIT PRICE | ADJ UNIT PRICE | LAND VALUE | OTHER ADJUSTMENTS AND NOTES | YEAR | DENSITY | DECL | FRZ | YR | CONSRV |
|---|---|---|---|---|---|---|---|---|---|---|---|---|---|---|---|---|---|---|---|---|---|---|---|---|
| 1 | 000135 | C | RES NATURAL | 100 | | PUD | 0.00 | 0.00 | 1.00 | LT | | 1.00 | 1.00 | 1.00 | 127,500.00 | 127,500.00 | 127,500 | | | | | | | |

REVIEW DATE 01/01/2023 BY CD Total Acres: 0.00 Total Land Value: 127,500 Market: 0 Agricultural: 0 Common: 127,500 PRINTED 07/09/2026 BY SYS