LOT 1
NORTH HAMPTON PHASE 1 PB 6/215

HOHNER JEFFREY J & CATHLEEN P
8626 NOYAK CT
FERNANDINA BEACH, FL 32034

2026

12-2N-27-1460-0001-0000

NASSAU COUNTY PROPERTY

BUILDING CHARACTERISTICS

ELEMENT	CD	CONSTRUCTION
Exterior Wall	16	WD FR STUC 100
Roof Structur	08	IRREGULAR 100
Roof Cover	03	COMP SHNGL 100
Interior Wall	05	DRYWALL 50
Interior Wall	08	DECORATIVE 50
Interior Floo	14	CARPET 60
Interior Floo	11	CLAY TILE 40
Air Condition	03	CENTRAL 100
Heating Type	04	AIR DUCTED 100
Bedrooms		6 100
Bathrooms		5 100
Frame	02	WOOD FRAME 100
Stories	3.	3. 100
Units		0 100
Occupancy	00	NONE 100
Quality	03	Quality Level 03
DOR CODE	0100	SINGLE FAMILY
MAP NUM		MKT AREA 04
NEIGHBORHOOD/LOC	4043.00	

AREA TYPE	TOTAL GROSS AREA	PCT OF BASE	YEAR	TOT ADJ AREA	SUBAREA MARKET VALUE
BAS	2,919	100	2001	2,919	388,442
FGR	565	55	2001	311	41,386
FOP	314	30	2001	94	12,509
FOP	540	30	2001	162	21,558
FUS	480	100	2001	480	63,875
FUS	563	100	2001	563	74,921
TOTALS	5,381			4,529	602,691

MARKET ADJUSTMENTS

TYPE	MDL	EFF. AREA	TOT ADJ PTS	EFF. BASE RATE	REPL. COST NEW	AYB	EYB	ECON	FNCT		NORM	% COND
0900	01	4,529	102.9420	143.09	648,055	2001	2011	0	0	0	7.00	93.00

1 SNGL FAM 100% - 2024 Heated Area: 3962 HX Base Yr 2024

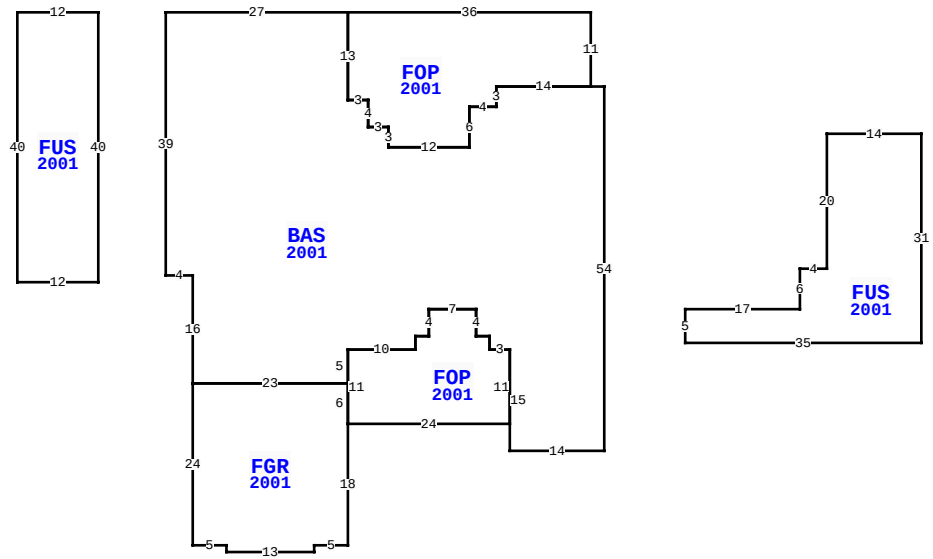

8626 NOYAK CT, FERNANDINA BEACH

BLD DATE	03/29/2023 NW	LGL DATE	
XF DATE		LAND DATE	
INC DATE		AG DATE	

VALUATION SUMMARY

VALUATION BY		STANDARD
Tax Group: 4	Tax Dist:	
BUILDING MARKET VALUE		602,691
TOTAL MARKET OB/XF VALUE		57,879
TOTAL LAND VALUE - MARKET		127,500
TOTAL MARKET VALUE		788,070
SOH/AGL Deduction		6,109
ASSESSED VALUE		781,961
TOTAL EXEMPTION VALUE	HX HB	51,411
BASE TAXABLE VALUE		730,550
TOTAL JUST VALUE		788,070
NCON VALUE		0
INCOME VALUE		
PREVIOUS YEAR MKT VALUE		766,537

PERMIT NUM	DESCRIPTION	AMT	ISSUED
B19619	ADDITION	5,628	03/01/2007
B19371	SWIM POOL	27,500	01/01/2007
P04636	OTHER	0	01/01/2001

SALES DATA

OFF RECORD Number	DATE	TYPE INST	Q U	V I	RSN CD	SALE PRICE
2649/1631	6/23/2023	WD	Q	I	01	900,000
GRANTOR: DEAL DEBORAH L & BOBB						
GRANTEE: HOHNER JEFFREY J &						
2549/1382	3/24/2022	WD	Q	I	01	715,500
GRANTOR: DESOMMA ANTHONY D ET						
GRANTEE: DEAL DEBORAH L & BO						

BUILDING NOTES

BUILDING DIMENSIONS

BAS=[YR=2001;ORIG=0,0] W2 W14 S3 W4 S6 W12 N3 W3 N4 W3 N13 W27 S39 E4 S16 E23 N5 E10 N2 E2 N4 E7 S4 E2 S2 E3 S15 E14 N54 $
FGR=[YR=2001;ORIG=-61,44] S24 E5 S1 E13 N1 E5 N18 N6 W23 $
FUS=[YR=2001;ORIG=12,33] E17 N6 E4 N20 E14 S31 W35 N5 $
FOP=[YR=2001;ORIG=-2,0] N11 W36 S13 E3 S4 E3 S3 E12 N6 E4 N3 E14 $
FUS=[YR=2001;ORIG=-75,29] N40 W12 S40 E12 $
FOP=[YR=2001;ORIG=-38,50] E24 N11 W3 N2 W2 N4 W7 S4 W2 S2 W10 S11 $
.

EXTRA FEATURES

LN	OB/XF CODE	DESCRIPTION	BLD	CAP	L	W	UNITS	UT	Adj R	ADJ UNIT PRICE	ORIG COND	YEAR ON	YEAR ACTUAL	Q	% COND	OB/XF MKT VALUE	NOTES
1	0500	FP-PRE FAB	0	100	0	0	1.00	UT	3,500.00	3,500.00	100	2001	2001	3	83	2,905	
4	0860	POOL/SPA	0	100	0	0	1.00	UT	60,000.00	60,000.00	100	2007	2007	05	85	51,000	
6	0911	SCRN RM A	0	100	0	0	920.00	SF	18.00	18.00	100	2007	2007	3	24	3,974	

LAND DESCRIPTION

TOTAL OB/XF 57,879

LN	USE CODE	CLS	LAND USE DESCRIPTION	CAP	RD	LOC ZONE	FRONT	DEPTH	TOT LND UTS	UNIT TYPE	DT	DPTH FACT	% COND	TOT ADJ	UNIT PRICE	ADJ UNIT PRICE	LAND VALUE	OTHER ADJUSTMENTS AND NOTES	YEAR	DENSITY	DECL	FRZ	YR	CONSRV
1	000135	C	RES NATURAL	100		PUD	0.00	0.00	1.00	LT		1.00	1.00	1.00	127,500.00	127,500.00	127,500							

REVIEW DATE 01/01/2023 BY CD Total Acres: 0.00 Total Land Value: 127,500 Market: 0 Agricultural: 0 Common: 127,500 PRINTED 07/09/2026 BY SYS