LOT 56
IN OR 2077/1569
PLUMMER CREEK PHASE TWO A

HARRIS LANCE KEY & TINA MOORE
86045 BLACK TERN DR
YULEE, FL 32097

2026

12-2N-26-1602-0056-0000

BUILDING CHARACTERISTICS

ELEMENT	CD	CONSTRUCTION
Exterior Wall	16	WD FR STUC 100
Roof Structur	08	IRREGULAR 100
Roof Cover	03	COMP SHNGL 100
Interior Wall	05	DRYWALL 100
Interior Floo	14	CARPET 70
Interior Floo	11	CLAY TILE 30
Air Condition	03	CENTRAL 100
Heating Type	04	AIR DUCTED 100
Bedrooms		6 100
Bathrooms		3 100
Frame	02	WOOD FRAME 100
Stories	0	0 100
Units		0 100
Occupancy	00	NONE 100
Quality	05	Quality Level 05

DOR CODE	0100	SINGLE FAMILY	
MAP NUM		MKT AREA	05
NEIGHBORHOOD/LOC	5013.00		

AREA TYPE	TOTAL GROSS AREA	PCT OF BASE	YEAR	TOT ADJ AREA	SUBAREA MARKET VALUE
BAS	1,417	100	2016	1,417	153,917
FEP	180	80	2016	144	15,642
FGR	704	55	2016	387	42,036
FOP	54	30	2016	16	1,738
FOP	260	30	2025	78	8,473
FUS	2,058	100	2016	2,058	223,544
STR	33	10	2016	3	326
TOTALS	4,706			4,103	445,675

MARKET ADJUSTMENTS

TYPE	MDL	EFF. AREA	TOT ADJ PTS	EFF. BASE RATE	REPL. COST NEW	AYB	EYB	ECON	FNCT		NORM	% COND
0100	01	4,103	108.3192	113.74	466,675	2016	2016	0	0	0	4.50	95.50

1 SINGLE FAM 100% - 2019 Heated Area: 3475 HX Base Yr 2019

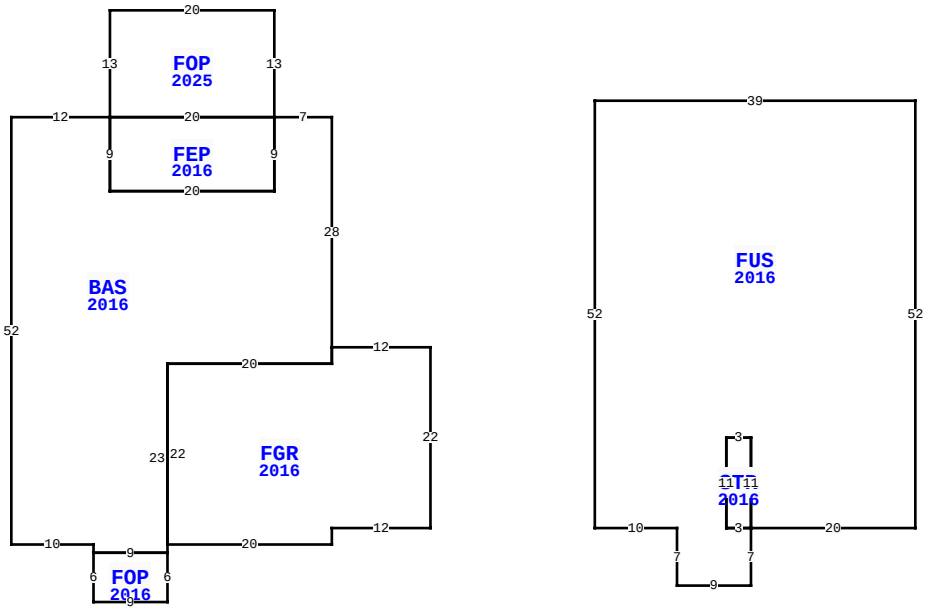

86045 BLACK TERN DR, YULEE

BLD DATE		LGL DATE	
XF DATE		LAND DATE	04/09/2026 MLU
INC DATE		AG DATE	

NASSAU COUNTY PROPERTY

PAGE 1 of 1 4

VALUATION SUMMARY

VALUATION BY		STANDARD
Tax Group: 4	Tax Dist:	
BUILDING MARKET VALUE		445,675
TOTAL MARKET OB/XF VALUE		0
TOTAL LAND VALUE - MARKET		65,000
TOTAL MARKET VALUE		510,675
SOH/AGL Deduction		149,300
ASSESSED VALUE		361,375
TOTAL EXEMPTION VALUE	HX HB	51,411
BASE TAXABLE VALUE		309,964
TOTAL JUST VALUE		510,675
NCON VALUE		0
INCOME VALUE		
PREVIOUS YEAR MKT VALUE		480,398

PERMIT NUM	DESCRIPTION	AMT	ISSUED
B240000435	ENCLOSING EXISTIN	31,263	01/12/2024
B1632322	CO ISSUED	0	10/12/2016
B1632322	NEW CONSTR	430,758	05/01/2016

SALES DATA

OFF RECORD Number	DATE	TYPE INST	Q U	V I	RSN CD	SALE PRICE
2077/1569	10/11/2016	WD	Q	I	01	276,200
GRANTOR: DREAM FINDERS HOMES L						
GRANTEE: HARRIS LANCE KEY &						
2039/0377	4/08/2016	WD	Q	V	05	992,600
GRANTOR: BWC LAND PLUMMER LLC						
GRANTEE: DREAM FINDERS HOMES						

BUILDING NOTES

EXTRA FEATURES

LN	OB/XF CODE	DESCRIPTION	BLD	CAP	L	W	UNITS	UT	Adj R	ADJ UNIT PRICE	ORIG COND	YEAR ON	YEAR ACTUAL	Q	% COND	OB/XF MKT VALUE	NOTES

BUILDING DIMENSIONS

FUS=[YR=2016;ORIG=20,-30] E39 S52 W20 N11 W3 S11 E3 S7 W9 N7 W10 N52 $
BAS=[YR=2016;ORIG=-12,0] N28 W7 S9 W20 N9 W12 S52 E10 S1 E9 N23 E20 N2 $
FGR=[YR=2016;ORIG=0,0] W12 S2 W20 S22 E20 N2 E12 N22 $
FOP=[YR=2025;ORIG=-39,-28] E20 N13 W20 S13 $
FEP=[YR=2016;ORIG=-39,-28] S9 E20 N9 W20 $
FOP=[YR=2016;ORIG=-41,25] S6 E9 N6 W9 $
STR=[YR=2016;ORIG=39,22] N11 W3 S11 E3 $
PTR=[ORIG=0,0] N30 E20 W20 S30 $
.

LAND DESCRIPTION

TOTAL OB/XF 0

LN	USE CODE	CLS	LAND USE DESCRIPTION	CAP	RD	LOC ZONE	FRONT	DEPTH	TOT LND UTS	UNIT TYPE	DT	DPTH FACT	% COND	TOT ADJ	UNIT PRICE	ADJ UNIT PRICE	LAND VALUE	OTHER ADJUSTMENTS AND NOTES	YEAR	DENSITY	DECL	FRZ	YR	CONSRV
1	000100	C	RES	100	0003	PUD	0.00	0.00	1.00	LT		1.00	1.00	1.00	65,000.00	65,000.00	65,000							

REVIEW DATE 05/22/2024 BY TW Total Acres: 0.00 Total Land Value: 65,000 Market: 0 Agricultural: 0 Common: 65,000 PRINTED 07/09/2026 BY SYS