LOT 172
PLUMMER CREEK #1 PB 8/28

MAY ANDREW
83286 PURPLE MARTIN DRIVE
YULEE, FL 32097

**2026**

**12-2N-26-1601-0172-0000**

## BUILDING CHARACTERISTICS

| ELEMENT | CD | CONSTRUCTION |
|---|---|---|
| Exterior Wall | 31 | HARDIE BRD 90 |
| Exterior Wall | 21 | STONE 10 |
| Roof Structur | 08 | IRREGULAR 100 |
| Roof Cover | 03 | COMP SHNGL 100 |
| Interior Wall | 05 | DRYWALL 100 |
| Interior Floo | 11 | CLAY TILE 90 |
| Interior Floo | 14 | CARPET 10 |
| Air Condition | 03 | CENTRAL 100 |
| Heating Type | 04 | AIR DUCTED 100 |
| Bedrooms | | 4 100 |
| Bathrooms | | 3 100 |
| Frame | 02 | WOOD FRAME 100 |
| Stories | 2. | 2. 100 |
| Units | | 0 100 |
| Occupancy | 00 | NONE 100 |
| Quality | 05 | Quality Level 05 |

| | | | |
|---|---|---|---|
| DOR CODE | 0100 SINGLE FAMILY | | |
| MAP NUM | | MKT AREA | 05 |
| NEIGHBORHOOD/LOC | 5013.00 | | |

| AREA TYPE | TOTAL GROSS AREA | PCT OF BASE | YEAR | TOT ADJ AREA | SUBAREA MARKET VALUE |
|---|---|---|---|---|---|
| BAS | 1,689 | 100 | 2015 | 1,689 | 229,199 |
| FGR | 460 | 55 | 2015 | 253 | 34,332 |
| FOP | 42 | 30 | 2015 | 13 | 1,764 |
| FOP | 112 | 30 | 2015 | 34 | 4,614 |
| FUS | 406 | 100 | 2015 | 406 | 55,095 |
| PTO | 112 | 5 | 2016 | 6 | 814 |
| PTO | 210 | 5 | 2026 | 10 | 1,357 |
| TOTALS | 3,031 | | | 2,411 | 327,176 |

## MARKET ADJUSTMENTS

| TYPE | MDL | EFF. AREA | TOT ADJ PTS | EFF. BASE RATE | REPL. COST NEW | AYB | EYB | ECON | FNCT | | NORM | % COND |
|---|---|---|---|---|---|---|---|---|---|---|---|---|
| 0100 | 01 | 2,411 | 135.3968 | 142.17 | 342,772 | 2015 | 2015 | 0 | 0 | 0 | 4.55 | 95.45 |

1 SINGLE FAM 100% - 2025 Heated Area: 2095 HX Base Yr 2025

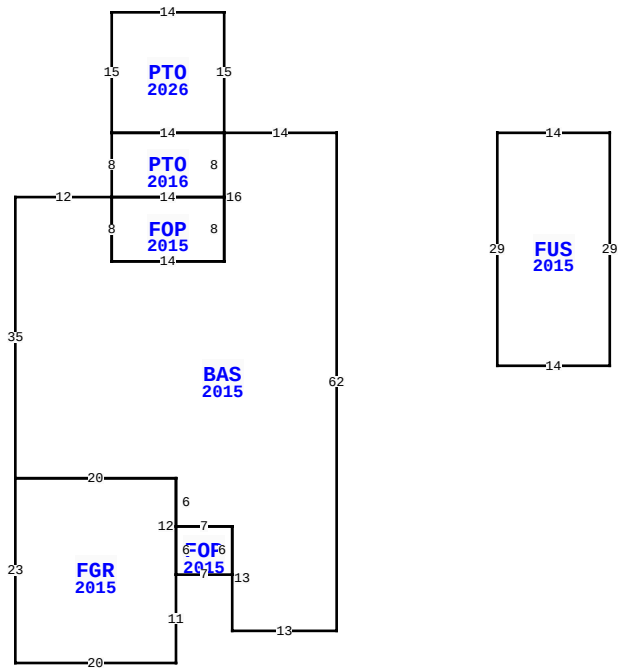


83286 PURPLE MARTIN DR, YULEE

| | | | |
|---|---|---|---|
| BLD DATE | | LGL DATE | |
| XF DATE | | LAND DATE | 04/09/2026 MLU |
| INC DATE | | AG DATE | |

## NASSAU COUNTY PROPERTY

PAGE 1 of 1 4

### VALUATION SUMMARY

| | | |
|---|---|---|
| VALUATION BY | | STANDARD |
| Tax Group: 4 | Tax Dist: | |
| BUILDING MARKET VALUE | | 327,176 |
| TOTAL MARKET OB/XF VALUE | | 2,344 |
| TOTAL LAND VALUE - MARKET | | 65,000 |
| TOTAL MARKET VALUE | | 394,520 |
| SOH/AGL Deduction | | 12,932 |
| ASSESSED VALUE | | 381,588 |
| TOTAL EXEMPTION VALUE | HX HB | 51,411 |
| BASE TAXABLE VALUE | | 330,177 |
| TOTAL JUST VALUE | | 394,520 |
| NCON VALUE | | 0 |
| INCOME VALUE | | |
| PREVIOUS YEAR MKT VALUE | | 371,556 |

| PERMIT NUM | DESCRIPTION | AMT | ISSUED |
|---|---|---|---|
| 22010226 | SCRN ENCLSR | 3,445 | 07/01/2022 |
| B1429434 | CO ISSUED | 0 | 01/30/2015 |
| B1429434 | NEW CONSTR | 259,442 | 10/01/2014 |

## SALES DATA

| OFF RECORD Number | DATE | TYPE INST | Q / U | V / I | RSN CD | SALE PRICE |
|---|---|---|---|---|---|---|
| 2697/770 | 3/01/2024 | WD | Q | I | 01 | 458,000 |
| GRANTOR: ELLIS WILLIAM RUSSELL | | | | | | |
| GRANTEE: MAY ANDREW | | | | | | |
| 2565/1139 | 5/18/2022 | WD | Q | I | 02 | 448,000 |
| GRANTOR: ELY JACOB M & AMANDA | | | | | | |
| GRANTEE: ELLIS WILLIAM R REV | | | | | | |

## BUILDING NOTES

## BUILDING DIMENSIONS

BAS=[YR=2015;ORIG=0,0] W14 S16 W14 N8 W12 S35 E20 S6 E7 S13 E13 N62 $
FGR=[YR=2015;ORIG=-40,43] S23 E20 N11 N12 W20 $
FUS=[YR=2015;ORIG=20,0] E14 S29 W14 N29 $
PTO=[YR=2016;ORIG=-14,0] W14 S8 E14 N8 $
FOP=[YR=2015;ORIG=-28,8] S8 E14 N8 W14 $
FOP=[YR=2015;ORIG=-20,55] E7 N6 W7 S6 $
PTR=[ORIG=0,0] E20 W20 $
PTO=[YR=2026;ORIG=-28,-15] E14 S15 W14 N15 $
.

## EXTRA FEATURES

| LN | OB/XF CODE | DESCRIPTION | BLD | CAP | L | W | UNITS | UT | Adj R | ADJ UNIT PRICE | ORIG COND | YEAR ON | YEAR ACTUAL | Q | % COND | OB/XF MKT VALUE | NOTES |
|---|---|---|---|---|---|---|---|---|---|---|---|---|---|---|---|---|---|
| 5 | 0911 | SCRN RM A | 1 | 100 | 14 | 10 | 140.00 | SF | 18.00 | 18.00 | 100 | 2023 | 2023 | 03 | 93 | 2,344 | |

## LAND DESCRIPTION

TOTAL OB/XF 2,344

| LN | USE CODE | CLS | LAND USE DESCRIPTION | CAP | RD | LOC ZONE | FRONT | DEPTH | TOT LND UTS | UNIT TYPE | DT | DPTH FACT | % COND | TOT ADJ | UNIT PRICE | ADJ UNIT PRICE | LAND VALUE | OTHER ADJUSTMENTS AND NOTES | YEAR | DENSITY | DECL | FRZ | YR | CONSRV |
|---|---|---|---|---|---|---|---|---|---|---|---|---|---|---|---|---|---|---|---|---|---|---|---|---|
| 1 | 000100 | C | RES | 100 | 0003 | PUD | 0.00 | 0.00 | 1.00 | LT | | 1.00 | 1.00 | 1.00 | 65,000.00 | 65,000.00 | 65,000 | | | | | | | |

REVIEW DATE 01/01/2023 BY CD Total Acres: 0.00 Total Land Value: 65,000 Market: 0 Agricultural: 0 Common: 65,000 PRINTED 07/09/2026 BY SYS