LOT 171
IN OR 2130/9
PLUMMER CREEK #1 PB 8/28

SHOOP CHRISTOPHER A & MICHELLE L
83276 PURPLE MARTIN DRIVE
YULEE, FL 32097

2026

12-2N-26-1601-0171-0000

BUILDING CHARACTERISTICS

ELEMENT	CD	CONSTRUCTION
Exterior Wall	10	ABOVE AVG 90
Exterior Wall	21	STONE 10
Roof Structur	08	IRREGULAR 100
Roof Cover	03	COMP SHNGL 100
Interior Wall	08	DECORATIVE 100
Interior Floo	11	CLAY TILE 70
Interior Floo	14	CARPET 30
Air Condition	03	CENTRAL 100
Heating Type	04	AIR DUCTED 100
Bedrooms		4 100
Bathrooms		3 100
Frame	02	WOOD FRAME 100
Stories	2.	2. 100
Units		0 100
Occupancy	00	NONE 100
Quality	05	Quality Level 05

DOR CODE	0100	SINGLE FAMILY	
MAP NUM		MKT AREA	05
NEIGHBORHOOD/LOC	5013.00		

AREA TYPE	TOTAL GROSS AREA	PCT OF BASE	YEAR	TOT ADJ AREA	SUBAREA MARKET VALUE
BAS	1,872	100	2015	1,872	251,621
FGR	441	55	2015	243	32,662
FOP	48	30	2015	14	1,881
FOP	240	30	2015	72	9,678
FUS	379	100	2015	379	50,943
PTO	420	5	2020	21	2,822
STR	51	10	2015	5	672
TOTALS	3,451			2,606	350,280

MARKET ADJUSTMENTS

TYPE	MDL	EFF. AREA	TOT ADJ PTS	EFF. BASE RATE	REPL. COST NEW	AYB	EYB	ECON	FNCT		NORM	% COND
0100	01	2,606	134.1120	140.82	366,977	2015	2015	0	0	0	4.55	95.45

1 SINGLE FAM 100% - 2018 Heated Area: 2251 HX Base Yr 2018

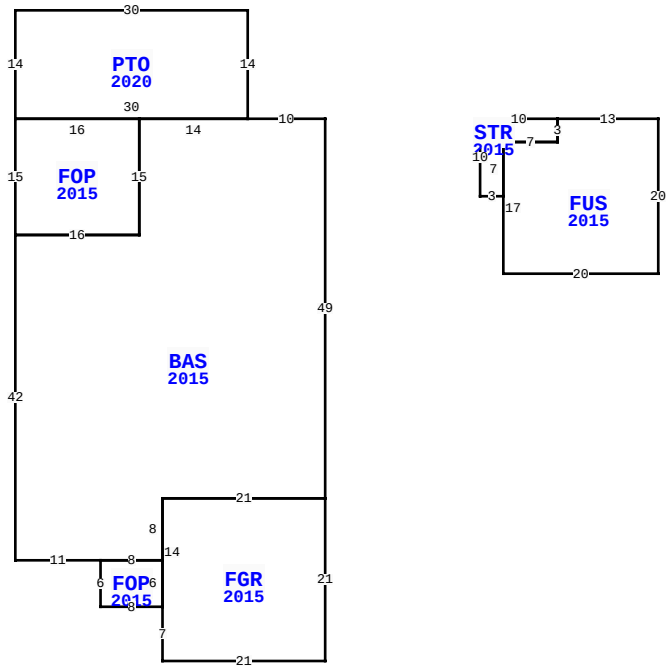

83276 PURPLE MARTIN DR, YULEE

BLD DATE		LGL DATE	
XF DATE		LAND DATE	04/09/2026 MLU
INC DATE		AG DATE	

NASSAU COUNTY PROPERTY

PAGE 1 of 1 4

VALUATION SUMMARY

VALUATION BY		STANDARD
Tax Group: 4	Tax Dist:	
BUILDING MARKET VALUE		350,280
TOTAL MARKET OB/XF VALUE		0
TOTAL LAND VALUE - MARKET		65,000
TOTAL MARKET VALUE		415,280
SOH/AGL Deduction		131,435
ASSESSED VALUE		283,845
TOTAL EXEMPTION VALUE	HX HB	51,411
BASE TAXABLE VALUE		232,434
TOTAL JUST VALUE		415,280
NCON VALUE		0
INCOME VALUE		
PREVIOUS YEAR MKT VALUE		388,012

PERMIT NUM	DESCRIPTION	AMT	ISSUED
B1429472	CO ISSUED	0	01/29/2015
B1429472	NEW CONSTR	279,335	10/01/2014

SALES DATA

OFF RECORD Number	DATE	TYPE INST	Q U	V I	RSN CD	SALE PRICE
2130/0009	6/22/2017	WD	Q	I	01	258,000
GRANTOR: HITTINGER ROBERT A &						
GRANTEE: SHOOP CHRISTOPHER A						
1968/1379	2/19/2015	WD	Q	I	01	220,800
GRANTOR: DREAM FINDERS HOMES L						
GRANTEE: HITTINGER ROBERT AU						

BUILDING NOTES

BUILDING DIMENSIONS

BAS=[YR=2015] W10 PTO=[YR=2020] N14 W30 S14 FOP=[YR=2015] S15 E16 N15 W16$ E30$ W14 S15 W16 S42 E11 FOP=[YR=2015] S6 E8 FGR=[YR=2015] S7 E21 N21 W21 S14$ N6 W8$ E8 N8 E21 N49$ PTR=E20 STR=[YR=2015] E10 FUS=[YR=2015] E13 S20 W20 N17 E7 N3$ S3 W7 S7 W3 N10$ W20$.

EXTRA FEATURES

L N	OB/XF CODE	DESCRIPTION	BLD	CAP	L	W	UNITS	UT	Adj R	ADJ UNIT PRICE	ORIG COND	YEAR ON	YEAR ACTUAL	Q	% COND	OB/XF MKT VALUE	NOTES

LAND DESCRIPTION

TOTAL OB/XF 0

L N	USE CODE	CLS	LAND USE DESCRIPTION	CAP	R D	LOC ZONE	FRONT	DEPTH	TOT LND UTS	UNIT TYPE	D T	DPTH FACT	% COND	TOT ADJ	UNIT PRICE	ADJ UNIT PRICE	LAND VALUE	OTHER ADJUSTMENTS AND NOTES	YEAR	DENSITY	DECL	FRZ	YR	CONSRV
1	000100	C	RES	100	0003	PUD	0.00	0.00	1.00	LT		1.00	1.00	1.00	65,000.00	65,000.00	65,000							

REVIEW DATE 01/01/2023 BY CD Total Acres: 0.00 Total Land Value: 65,000 Market: 0 Agricultural: 0 Common: 65,000 PRINTED 07/09/2026 BY SYS