LOT 160
PLUMMER CREEK #1 PB 8/28

WILKES ROME W & BROOKE R
83176 PURPLE MARTIN DR
YULEE, FL 32097

2026

12-2N-26-1601-0160-0000

BUILDING CHARACTERISTICS

ELEMENT	CD	CONSTRUCTION
Exterior Wall	10	ABOVE AVG 100
Roof Structur	08	IRREGULAR 100
Roof Cover	03	COMP SHNGL 100
Interior Wall	05	DRYWALL 100
Interior Floo	14	CARPET 70
Interior Floo	08	SHT VINYL 30
Air Condition	03	CENTRAL 100
Heating Type	04	AIR DUCTED 100
Bedrooms		4 100
Bathrooms		3 100
Frame	02	WOOD FRAME 100
Stories	2.	2. 100
Units		0 100
Occupancy	00	NONE 100
Quality	05	Quality Level 05
DOR CODE	0100	SINGLE FAMILY
MAP NUM		MKT AREA 05
NEIGHBORHOOD/LOC	5013.00	

AREA TYPE	TOTAL GROSS AREA	PCT OF BASE	YEAR	TOT ADJ AREA	SUBAREA MARKET VALUE
BAS	1,902	100	2015	1,902	225,580
FGR	441	55	2015	243	28,820
FOP	48	30	2015	14	1,661
FOP	210	30	2015	63	7,472
FUS	382	100	2015	382	45,306
PTO	288	5	2026	14	1,661
STR	39	10	2015	4	475
TOTALS	3,310			2,622	310,973

MARKET ADJUSTMENTS

TYPE	MDL	EFF. AREA	TOT ADJ PTS	EFF. BASE RATE	REPL. COST NEW	AYB	EYB	ECON	FNCT		NORM	% COND
0100	01	2,622	118.2720	124.19	325,626	2015	2015	0	0	0	4.50	95.50

1 SINGLE FAM 100% - 2021 Heated Area: 2284 HX Base Yr 2021

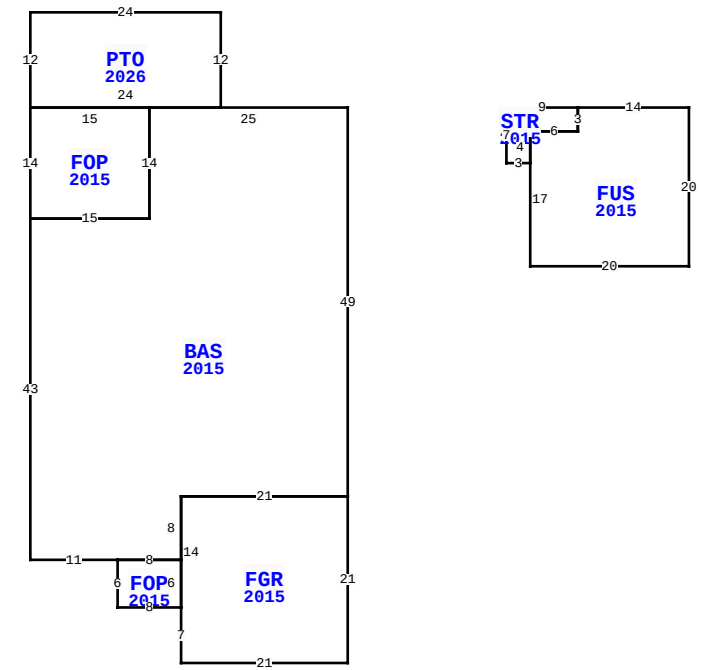

83176 PURPLE MARTIN DR, YULEE

BLD DATE		LGL DATE	
XF DATE		LAND DATE	04/09/2026 MLU
INC DATE		AG DATE	

NASSAU COUNTY PROPERTY

PAGE 1 of 1 4

VALUATION SUMMARY

VALUATION BY		STANDARD
Tax Group: 4	Tax Dist:	
BUILDING MARKET VALUE		310,973
TOTAL MARKET OB/XF VALUE		1,920
TOTAL LAND VALUE - MARKET		65,000
TOTAL MARKET VALUE		377,893
SOH/AGL Deduction		123,657
ASSESSED VALUE		254,236
TOTAL EXEMPTION VALUE	HX HB	51,411
BASE TAXABLE VALUE		202,825
TOTAL JUST VALUE		377,893
NCON VALUE		0
INCOME VALUE		
PREVIOUS YEAR MKT VALUE		350,673

PERMIT NUM	DESCRIPTION	AMT	ISSUED
B1530683	CO ISSUED	0	10/26/2015
B1530683	NEW CONSTR	282,577	06/01/2015

SALES DATA

OFF RECORD Number	DATE	TYPE INST	Q / U	V / I	RSN CD	SALE PRICE
2400/1278	10/07/2020	WD	Q	I	01	315,000
GRANTOR: BEACH JAMES E & RACHE						
GRANTEE: WILKES ROME W & BRO						
2012/0556	10/27/2015	WD	Q	I	01	225,700
GRANTOR: DREAM FINDERS HOMES L						
GRANTEE: BEACH JAMES E & RAC						

BUILDING NOTES

BUILDING DIMENSIONS

BAS=[YR=2015;ORIG=0,0] W25 S14 W15 S43 E11 E8 N8 E21 N49 $
FGR=[YR=2015;ORIG=-21,63] S7 E21 N21 W21 S14 $
FUS=[YR=2015;ORIG=29,0] E14 S20 W20 N17 E6 N3 $
FOP=[YR=2015;ORIG=-25,0] W15 S14 E15 N14 $
FOP=[YR=2015;ORIG=-29,57] S6 E8 N6 W8 $
STR=[YR=2015;ORIG=20,0] E9 S3 W6 S4 W3 N7 $
PTR=[ORIG=0,0] E20 W20 $
PTO=[YR=2026;ORIG=-40,-12] E24 S12 W24 N12 $
.

EXTRA FEATURES

LN	OB/XF CODE	DESCRIPTION	BLD	CAP	L	W	UNITS	UT	Adj R	ADJ UNIT PRICE	ORIG COND	YEAR ON	YEAR ACTUAL	Q	% COND	OB/XF MKT VALUE	NOTES
2	0504	FP-ELECTRI	0	100	0	0	1.00	UT	2,000.00	2,000.00	100	2015	2015	3	96	1,920	

LAND DESCRIPTION

TOTAL OB/XF 1,920

LN	USE CODE	CLS	LAND USE DESCRIPTION	CAP	RD	LOC ZONE	FRONT	DEPTH	TOT LND UTS	UNIT TYPE	DT	DPTH FACT	% COND	TOT ADJ	UNIT PRICE	ADJ UNIT PRICE	LAND VALUE	OTHER ADJUSTMENTS AND NOTES	YEAR	DENSITY	DECL	FRZ	YR	CONSRV
1	000100	C	RES	100	0003	PUD	0.00	0.00	1.00	LT		1.00	1.00	1.00	65,000.00	65,000.00	65,000							

REVIEW DATE 01/01/2023 BY CD Total Acres: 0.00 Total Land Value: 65,000 Market: 0 Agricultural: 0 Common: 65,000 PRINTED 07/09/2026 BY SYS