PT J PELOT GRANT SEC 11-2N-28E
IN OR 2552/1189
ESMT IN OR 1512/745

BARROW ANN THOMAS L/E/
4320 DUNEWOOD PL
FERNANDINA BEACH, FL 32034

2026

11-2N-28-0000-0001-0020

NASSAU COUNTY PROPERTY

BUILDING CHARACTERISTICS

ELEMENT	CD	CONSTRUCTION
Exterior Wall	10	ABOVE AVG 100
Roof Structur	03	GABLE/HIP 100
Roof Cover	03	COMP SHNGL 100
Interior Wall	05	DRYWALL 100
Interior Floo	12	HARDWOOD 90
Interior Floo	14	CARPET 10
Air Condition	03	CENTRAL 100
Heating Type	04	AIR DUCTED 100
Bedrooms		3 100
Bathrooms		2 100
Frame	02	WOOD FRAME 100
Stories	1.5	1.5 100
Units		0 100
BUD8 Adjustme	05	DIST 1A 100
Occupancy	00	NONE 100
Quality	05	Quality Level 05
DOR CODE	0100	SINGLE FAMILY
MAP NUM		MKT AREA 03
NEIGHBORHOOD/LOC	2030.00	

AREA TYPE	TOTAL GROSS AREA	PCT OF BASE	YEAR	TOT ADJ AREA	SUBAREA MARKET VALUE
BAS	1,840	100	1993	1,840	292,033
BAS	56	100	2010	56	8,888
BAS	63	100	2010	63	9,999
BAS	70	100	2010	70	11,110
FGR	864	55	2010	475	75,389
FOP	40	30	2010	12	1,905
FOP	460	30	2010	138	21,903
PTO	32	5	2010	2	317
PTO	36	5	2010	2	317
SFB	27	80	2010	22	3,492
TOTALS	4,223			3,121	495,345

MARKET ADJUSTMENTS

TYPE	MDL	EFF. AREA	TOT ADJ PTS	EFF. BASE RATE	REPL. COST NEW	AYB	EYB	ECON	FNCT		NORM	% COND
0500	01	3,121	111.8260	185.63	579,351	1974	1995	0	0	0	14.50	85.50

1 SFR CUST 100% - 2011 Heated Area: 2453 HX Base Yr 2011

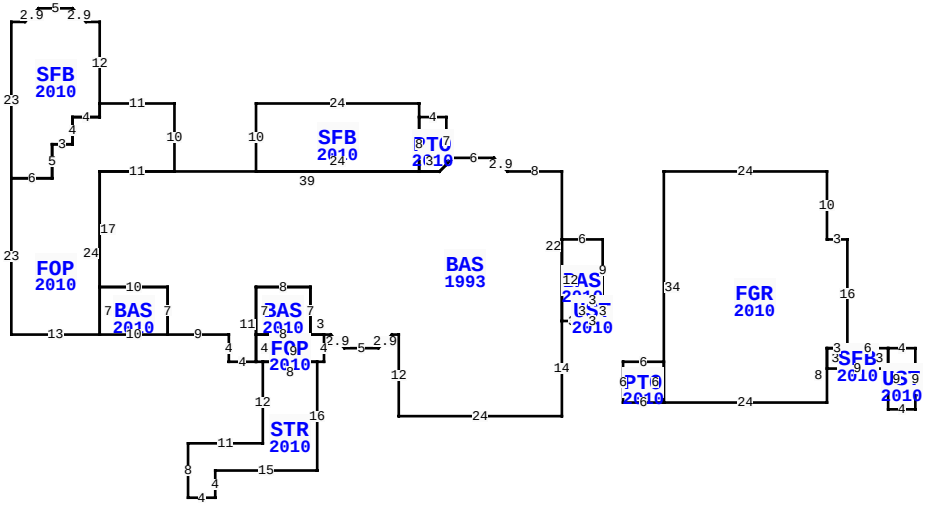

** This building has 15 Sub-Areas

4320 DUNEWOOD PL, FERNANDINA BEACH

BLD DATE	11/05/2007 KK	LGL DATE	
XF DATE		LAND DATE	04/20/2026 MLU
INC DATE		AG DATE	

VALUATION SUMMARY

VALUATION BY		STANDARD
Tax Group: 8	Tax Dist:	
BUILDING MARKET VALUE		495,345
TOTAL MARKET OB/XF VALUE		44,460
TOTAL LAND VALUE - MARKET		400,000
TOTAL MARKET VALUE		939,805
SOH/AGL Deduction		595,522
ASSESSED VALUE		344,283
TOTAL EXEMPTION VALUE	HX HB	51,411
BASE TAXABLE VALUE		292,872
TOTAL JUST VALUE		939,805
NCON VALUE		0
INCOME VALUE		
PREVIOUS YEAR MKT VALUE		847,315

PERMIT NUM	DESCRIPTION	AMT	ISSUED
G01546	GAS	1,095	06/01/2010
M15383	H/AC	0	06/01/2010
P14309	REMODEL	0	06/01/2010
B23451	REMODEL	400,000	04/01/2010
5601	GARAGE	5,305	03/30/1989
3452	N/A	11,500	07/01/1987

SALES DATA

OFF RECORD Number	DATE	TYPE INST	Q / U	V / I	RSN CD	SALE PRICE
2552/1189	2/24/2022	WD	U	I	11	100
GRANTOR: BARROW ANN THOMAS						
GRANTEE: BARROW ANN THOMAS L						
1815/1262	9/13/2012	QC	U	I	11	100
GRANTOR: FISHER MICHAEL E						
GRANTEE: BARROW ANN THOMAS						

BUILDING NOTES

BUILDING DIMENSIONS

BAS=[YR=1993] W8 U2 L2 W6 D1 L1 PTO=[YR=2010] N7 W4 SFB=[YR=2010] N2 W24 S10 E24 N8$ S8E3 U1 R1 $ D1 L1 W39 FOP=[YR=2010] N10 W11 SFB=[YR=2010] N12 W2 U2 L2 W5 D2 L2 W2 S23 E6 N5 E3 N4 E4 N2$ S2 W4 S4 W3 S5 W6 S23 E13 BAS=[YR=2010] E10 N7 W10 S7$ N24 E11$ W11 S17 E10 S7 E9 S4 E4 FOP=[YR=2010] E1 STR=[YR=2010] S12 W11 S8 E4 N4 E15 N16 W8$ E9 N4 W2 BAS=[YR=2010] N7 W8 S7 E8$ W8 S4$ N11 E8 S7 E3 D2 R2 E5 U2 R2 E1 S12 E24 N14 BAS=[YR=2010] E3 UST=[YR=2010] E3N3W3S3$ N3E3 N9 W6 S12$ N22$ PTR=E15 FGR=[YR=2010] E24 S10 E3 S16 SFB=[YR=2010] E6 UST=[YR=2010] E4 S9 W4 N9$ S3 W9 N3 E3$ W3 S8 W24 PTO=[YR=2010] W6N6E6S6$ N34$ W15$.

EXTRA FEATURES

LN	OB/XF CODE	DESCRIPTION	BLD	CAP	L	W	UNITS	UT	Adj R	ADJ UNIT PRICE	ORIG COND	YEAR ON	YEAR ACTUAL	Q	% COND	OB/XF MKT VALUE	NOTES
1	0500	FP-PRE FAB	0	100	0	0	1.00	UT	3,500.00	3,500.00	100	1980	1980	3	42	1,470	
3	0860	POOL/SPA	0	100	0	0	1.00	UT	50,000.00	50,000.00	100	1986	1986	04	85	42,500	
5	0820	WOOD WALK	0	100	0	0	75.00	SF	11.75	11.75	100	2010	2010	3	40	353	
6	1242	WD DECK A	0	100	0	0	39.00	SF	10.00	10.00	100	2010	2010	3	35	137	

LAND DESCRIPTION

TOTAL OB/XF 44,460

LN	USE CODE	CLS	LAND USE DESCRIPTION	CAP	RD	LOC ZONE	FRONT	DEPTH	TOT LND UTS	UNIT TYPE	DT	DPTH FACT	% COND	TOT ADJ	UNIT PRICE	ADJ UNIT PRICE	LAND VALUE	OTHER ADJUSTMENTS AND NOTES	YEAR	DENSITY	DECL	FRZ	YR	CONSRV
1	000140	C	RES GOLF	100		RSF-1	0.00	0.00	1.00	LT		1.00	1.00	1.00	400,000.00	400,000.00	400,000							

REVIEW DATE 01/01/2023 BY CD Total Acres: 0.00 Total Land Value: 400,000 Market: 0 Agricultural: 0 Common: 400,000 PRINTED 07/09/2026 BY SYS