LOT 25
IN OR 2065/1622
TIMBER CREEK PLANTATION #3

MCCAULEY BRIAN D JR & MICHELLE
76554 TIMBERCREEK BLVD
YULEE, FL 32097

2026

11-2N-26-2052-0025-0000

NASSAU COUNTY PROPERTY

BUILDING CHARACTERISTICS

ELEMENT	CD	CONSTRUCTION
Exterior Wall	16	WD FR STUC 100
Roof Structur	03	GABLE/HIP 100
Roof Cover	03	COMP SHNGL 100
Interior Wall	05	DRYWALL 100
Interior Floo	14	CARPET 80
Interior Floo	11	CLAY TILE 20
Air Condition	03	CENTRAL 100
Heating Type	04	AIR DUCTED 100
Bedrooms		3 100
Bathrooms		2.5 100
Frame	02	WOOD FRAME 100
Stories	2.	2. 100
Units		0 100
Occupancy	00	NONE 100
Quality	03	Quality Level 03

DOR CODE 0100 SINGLE FAMILY
MAP NUM | MKT AREA 05
NEIGHBORHOOD/LOC 5005.00

AREA TYPE	TOTAL GROSS AREA	PCT OF BASE	YEAR	TOT ADJ AREA	SUBAREA MARKET VALUE
BAS	985	100	2012	985	103,601
FGR	717	55	2012	394	41,440
FOP	40	30	2012	12	1,262
FSP	210	40	2012	84	8,835
FUS	1,178	100	2012	1,178	123,900
PTO	120	5	2025	6	631
TOTALS	3,250			2,659	279,669

MARKET ADJUSTMENTS

TYPE	MDL	EFF. AREA	TOT ADJ PTS	EFF. BASE RATE	REPL. COST NEW	AYB	EYB	ECON	FNCT		NORM	% COND
0100	01	2,659	107.1360	112.49	299,111	2012	2012	0	0	0	6.50	93.50

1 SINGLE FAM 100% - 2018 Heated Area: 2163 HX Base Yr 2018

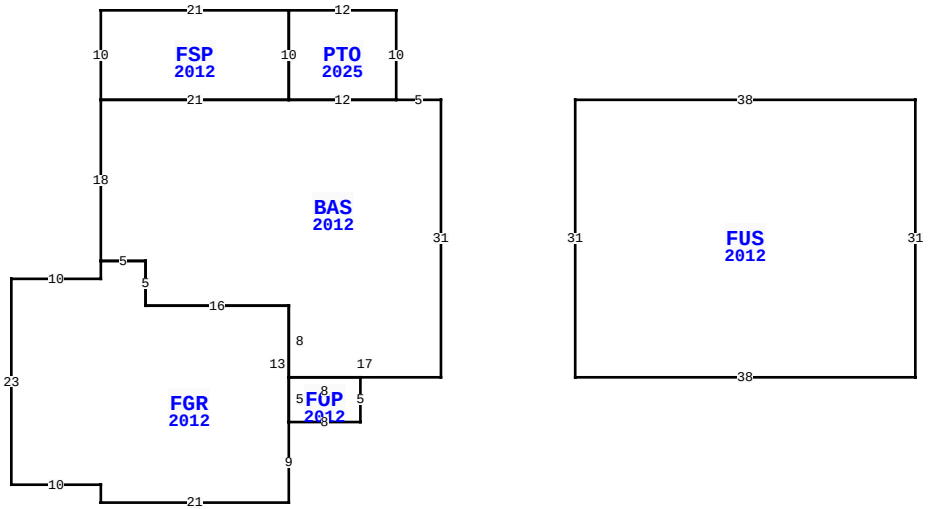

76554 TIMBERCREEK BLVD, YULEE

BLD DATE	10/24/2012 KK	LGL DATE	
XF DATE		LAND DATE	04/09/2026 MLU
INC DATE		AG DATE	

VALUATION SUMMARY

VALUATION BY		STANDARD
Tax Group: 4	Tax Dist:	
BUILDING MARKET VALUE		279,669
TOTAL MARKET OB/XF VALUE		2,444
TOTAL LAND VALUE - MARKET		54,000
TOTAL MARKET VALUE		336,113
SOH/AGL Deduction		99,826
ASSESSED VALUE		236,287
TOTAL EXEMPTION VALUE	HX HB VX	56,411
BASE TAXABLE VALUE		179,876
TOTAL JUST VALUE		336,113
NCON VALUE		0
INCOME VALUE		
PREVIOUS YEAR MKT VALUE		332,242

PERMIT NUM	DESCRIPTION	AMT	ISSUED
B240008687	912-10*12.5	21,663	07/25/2024
C1226232	CO ISSUED	0	10/24/2012
B26232	NEW CONSTR	250,408	08/02/2012

SALES DATA

OFF RECORD Number	DATE	TYPE INST	Q / U	V / I	RSN CD	SALE PRICE
2065/1622	8/17/2016	WD	Q	I	01	201,200
GRANTOR: SLOAN BRYAN & TABATHA						
GRANTEE: MCCAULEY BRIAN D JR						
1822/0491	10/24/2012	WD	Q	I	02	189,300
GRANTOR: KB HOME JACKSONVILLE						
GRANTEE: SLOAN BRYAN & TABAT						

BUILDING NOTES

EXTRA FEATURES

LN	OB/XF CODE	DESCRIPTION	BLD	CAP	L	W	UNITS	UT	Adj R	ADJ UNIT PRICE	ORIG COND	YEAR ON	YEAR ACTUAL	Q	% COND	OB/XF MKT VALUE	NOTES
3	0912	SCRN RM G	0	100	12	10	120.00	SF	21.00	21.00	100	2025	2024		97	2,444	

BUILDING DIMENSIONS

FUS=[YR=2012;ORIG=15,0] E38 S31 W38 N31 $
BAS=[YR=2012;ORIG=0,0] W5 W12 W21 S18 E5 S5 E16 S8 E17 N31 $
FGR=[YR=2012;ORIG=-38,18] S2 W10 S23 E10 S2 E21 N9 N13 W16 N5 W5 $
FSP=[YR=2012;ORIG=-17,0] N10 W21 S10 E21 $
FOP=[YR=2012;ORIG=-17,36] E8 N5 W8 S5 $
PTR=[ORIG=0,0] E15 W15 $
PTO=[YR=2025;ORIG=-17,0] E12 N10 W12 S10 $
.

LAND DESCRIPTION

TOTAL OB/XF 2,444

LN	USE CODE	CLS	LAND USE DESCRIPTION	CAP	RD	LOC ZONE	FRONT	DEPTH	TOT LND UTS	UNIT TYPE	DT	DPTH FACT	% COND	TOT ADJ	UNIT PRICE	ADJ UNIT PRICE	LAND VALUE	OTHER ADJUSTMENTS AND NOTES	YEAR	DENSITY	DECL	FRZ	YR	CONSRV
1	000100	C	RES	100	0003	PUD	0.00	0.00	1.00	LT		1.00	1.00	1.00	54,000.00	54,000.00	54,000							

REVIEW DATE 12/17/2024 BY TW Total Acres: 0.00 Total Land Value: 54,000 Market: 0 Agricultural: 0 Common: 54,000 PRINTED 07/09/2026 BY SYS