LOT 62
TIMBER CREEK PLANTATION #2
PB 7/165

AROCHA ABEL G & LINDSAY J
75308 RAVENWOOD DR
YULEE, FL 32097

**2026**

**11-2N-26-2051-0062-0000**

## NASSAU COUNTY PROPERTY



## BUILDING CHARACTERISTICS

| ELEMENT | CD | CONSTRUCTION |
|---|---|---|
| Exterior Wall | 16 | WD FR STUC 100 |
| Roof Structur | 03 | GABLE/HIP 100 |
| Roof Cover | 03 | COMP SHNGL 100 |
| Interior Wall | 05 | DRYWALL 100 |
| Interior Floo | 14 | CARPET 70 |
| Interior Floo | 08 | SHT VINYL 30 |
| Air Condition | 03 | CENTRAL 100 |
| Heating Type | 04 | AIR DUCTED 100 |
| Bedrooms | | 3 100 |
| Bathrooms | | 2.5 100 |
| Frame | 02 | WOOD FRAME 100 |
| Stories | 2. | 2. 100 |
| Units | | 0 100 |
| Occupancy | 00 | NONE 100 |
| Quality | 03 | Quality Level 03 |

DOR CODE 0100 SINGLE FAMILY

MAP NUM | MKT AREA 05

NEIGHBORHOOD/LOC 5005.00

| AREA TYPE | TOTAL GROSS AREA | PCT OF BASE | YEAR | TOT ADJ AREA | SUBAREA MARKET VALUE |
|---|---|---|---|---|---|
| BAS | 1,540 | 100 | 2006 | 1,540 | 138,283 |
| FGR | 465 | 55 | 2006 | 256 | 22,987 |
| FOP | 48 | 30 | 2006 | 14 | 1,257 |
| FOP | 215 | 30 | 2006 | 64 | 5,747 |
| FUS | 1,732 | 100 | 2006 | 1,732 | 155,523 |
| STP | 9 | 10 | 2006 | 1 | 90 |
| TOTALS | 4,009 | | | 3,607 | 323,888 |

## MARKET ADJUSTMENTS

| TYPE | MDL | EFF. AREA | TOT ADJ PTS | EFF. BASE RATE | REPL. COST NEW | AYB | EYB | ECON | FNCT | | NORM | % COND |
|---|---|---|---|---|---|---|---|---|---|---|---|---|
| 0100 | 01 | 3,607 | 94.5000 | 99.22 | 357,887 | 2006 | 2006 | 0 | 0 | 0 | 9.50 | 90.50 |

1 SINGLE FAM 100% - 2023 Heated Area: 3272 HX Base Yr

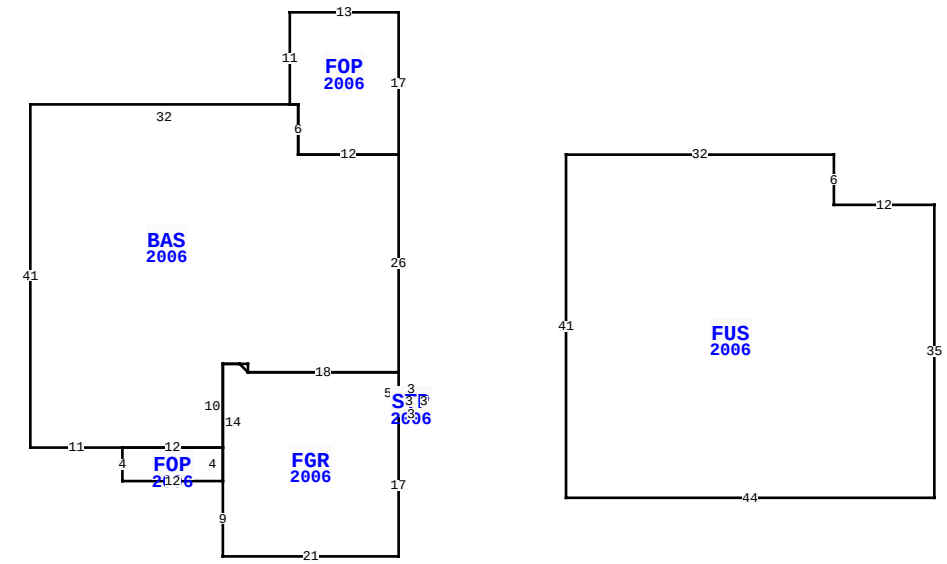


75308 RAVENWOOD DR, YULEE

| | | | | |
|---|---|---|---|---|
| BLD DATE | 02/01/2013 | KK | LGL DATE | |
| XF DATE | 03/05/2007 | JM | LAND DATE | 04/09/2026 MLU |
| INC DATE | | | AG DATE | |

## VALUATION SUMMARY

| | | |
|---|---|---|
| VALUATION BY | | STANDARD |
| Tax Group: 4 | Tax Dist: | |
| BUILDING MARKET VALUE | | 323,888 |
| TOTAL MARKET OB/XF VALUE | | 0 |
| TOTAL LAND VALUE - MARKET | | 54,000 |
| TOTAL MARKET VALUE | | 377,888 |
| SOH/AGL Deduction | | 6,954 |
| ASSESSED VALUE | | 370,934 |
| TOTAL EXEMPTION VALUE | 13 | 370,934 |
| BASE TAXABLE VALUE | | 0 |
| TOTAL JUST VALUE | | 377,888 |
| NCON VALUE | | 0 |
| INCOME VALUE | | |
| PREVIOUS YEAR MKT VALUE | | 367,872 |

| PERMIT NUM | DESCRIPTION | AMT | ISSUED |
|---|---|---|---|
| 23003720 | REPAIR/RRF | 17,084 | 03/21/2023 |
| M12000 | MECH OTHER | 0 | 09/01/2006 |
| E17987 | ELEC OTHER | 1,500 | 08/01/2006 |
| P11410 | OTHER | 0 | 08/01/2006 |
| C18254 | CO ISSUED | 260,370 | 07/01/2006 |
| R09552 | REPAIR/RRF | 2,000 | 07/01/2006 |

## SALES DATA

| OFF RECORD Number | DATE | TYPE INST | Q U | V I | RSN CD | SALE PRICE |
|---|---|---|---|---|---|---|
| 2443/0039 | 3/08/2021 | WD | Q | I | 01 | 320,300 |
| GRANTOR: BIOLSI JOSHUA L & BRO | | | | | | |
| GRANTEE: AROCHA ABEL G & LIN | | | | | | |
| 2233/1935 | 10/30/2018 | WD | Q | I | 01 | 266,500 |
| GRANTOR: BRACKENS KEVIN D & HE | | | | | | |
| GRANTEE: BIOLSI JOSHUA L & B | | | | | | |

## BUILDING NOTES

## BUILDING DIMENSIONS

FOP=[YR=2006] N17 W13 S11E1 S6 E12$ BAS=[YR=2006] W12 N6 W32 S41 E11 FOP=[YR=2006] S4 E12 FGR=[YR=2006] S9 E21 N17 STP=[YR=2006] E3 N3 W3 S3$ N5 W18 U1 L1 W2 S14$ N4 W12$ E12 N10 E2 E1 S1 E18 N26$ PTR= E20 FUS=[YR=2006] E32 S6 E12 S35 W44 N41$ W20$.

## EXTRA FEATURES

| L N | OB/XF CODE | DESCRIPTION | BLD | CAP | L | W | UNITS | UT | Adj R | ADJ UNIT PRICE | ORIG COND | YEAR ON | YEAR ACTUAL | Q | % COND | OB/XF MKT VALUE | NOTES |
|---|---|---|---|---|---|---|---|---|---|---|---|---|---|---|---|---|---|

## LAND DESCRIPTION

TOTAL OB/XF 0

| L N | USE CODE | CLS | LAND USE DESCRIPTION | CAP | R D | LOC ZONE | FRONT | DEPTH | TOT LND UTS | UNIT TYPE | D T | DPTH FACT | % COND | TOT ADJ | UNIT PRICE | ADJ UNIT PRICE | LAND VALUE | OTHER ADJUSTMENTS AND NOTES | YEAR | DENSITY | DECL | FRZ | YR | CONSRV |
|---|---|---|---|---|---|---|---|---|---|---|---|---|---|---|---|---|---|---|---|---|---|---|---|---|
| 1 | 000134 | C | RES POND | 100 | 0003 | PUD | 0.00 | 0.00 | 1.00 | LT | | 1.00 | 1.00 | 1.00 | 54,000.00 | 54,000.00 | 54,000 | | | | | | | |

REVIEW DATE 01/01/2023 BY CD Total Acres: 0.00 Total Land Value: 54,000 Market: 0 Agricultural: 0 Common: 54,000 PRINTED 07/09/2026 BY SYS