LOT 11
TIMBER CREEK PLANTATION #1
PB 6/394

SHAW RICHARD A SR & NANCY A
76187 TIDEVIEW LANE
YULEE, FL 32097

2026

11-2N-26-2050-0011-0000

NASSAU COUNTY PROPERTY

BUILDING CHARACTERISTICS

ELEMENT	CD	CONSTRUCTION
Exterior Wall	16	WD FR STUC 100
Roof Structur	03	GABLE/HIP 100
Roof Cover	03	COMP SHNGL 100
Interior Wall	05	DRYWALL 100
Interior Floo	14	CARPET 90
Interior Floo	08	SHT VINYL 10
Air Condition	03	CENTRAL 100
Heating Type	04	AIR DUCTED 100
Bedrooms		5 100
Bathrooms		3.5 100
Frame	02	WOOD FRAME 100
Stories	2.	2. 100
Units		0 100
Occupancy	00	NONE 100
Quality	03	Quality Level 03

DOR CODE 0100 SINGLE FAMILY
MAP NUM | MKT AREA 05
NEIGHBORHOOD/LOC 5005.00

AREA TYPE	TOTAL GROSS AREA	PCT OF BASE	YEAR	TOT ADJ AREA	SUBAREA MARKET VALUE
BAS	1,708	100	2007	1,708	158,629
FGR	692	55	2007	381	35,385
FOP	108	30	2007	32	2,972
FOP	200	30	2007	60	5,573
FUS	1,792	100	2007	1,792	166,432
STP	9	10	2007	1	93
TOTALS	4,509			3,974	369,083

MARKET ADJUSTMENTS

TYPE	MDL	EFF. AREA	TOT ADJ PTS	EFF. BASE RATE	REPL. COST NEW	AYB	EYB	ECON	FNCT		NORM	% COND
0100	01	3,974	97.2000	102.06	405,586	2007	2007	0	0	0	9.00	91.00

1 SINGLE FAM 100% - 2020 Heated Area: 3500 HX Base Yr 2020

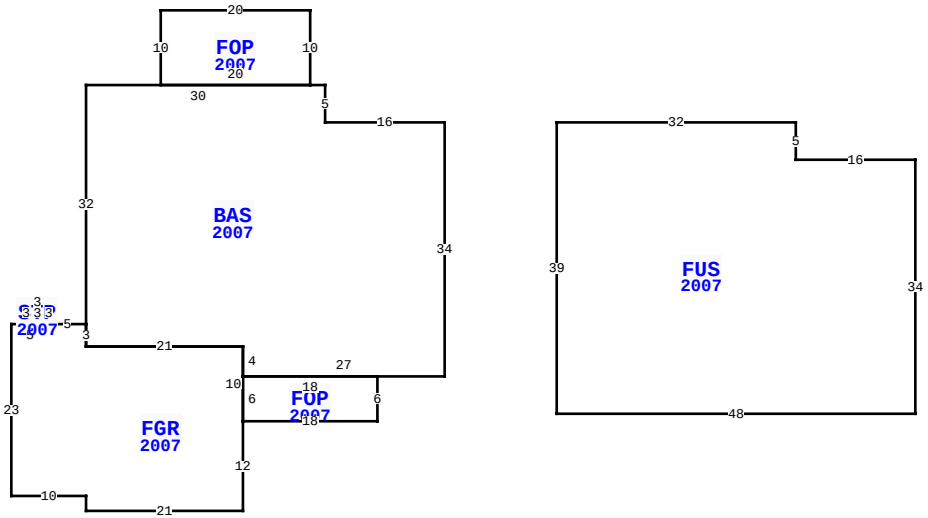

76187 TIDEVIEW LN, YULEE

BLD DATE	10/05/2007	JM	LGL DATE	
XF DATE	10/05/2007	JM	LAND DATE	04/09/2026 MLU
INC DATE			AG DATE	

VALUATION SUMMARY

VALUATION BY		STANDARD
Tax Group: 4	Tax Dist:	
BUILDING MARKET VALUE		369,083
TOTAL MARKET OB/XF VALUE		0
TOTAL LAND VALUE - MARKET		54,000
TOTAL MARKET VALUE		423,083
SOH/AGL Deduction		152,996
ASSESSED VALUE		270,087
TOTAL EXEMPTION VALUE	HX HB	51,411
BASE TAXABLE VALUE		218,676
TOTAL JUST VALUE		423,083
NCON VALUE		0
INCOME VALUE		
PREVIOUS YEAR MKT VALUE		412,466

PERMIT NUM	DESCRIPTION	AMT	ISSUED
E19160	ELEC OTHER	1,500	04/01/2007
M12877	MECH OTHER	0	04/01/2007
P12281	OTHER	0	04/01/2007
C19686	CO ISSUED	0	03/01/2007
R10236	REPAIR/RRF	2,000	03/01/2007
B19686	NEW CONSTR	293,766	03/01/2007

SALES DATA

OFF RECORD Number	DATE	TYPE INST	Q U	V I	RSN CD	SALE PRICE
2272/1406	4/30/2019	WD	Q	I	02	285,000
GRANTOR: MERCER ROBERT E						
GRANTEE: SHAW RICHARD A SR &						
1520/1222	8/22/2007	WD	Q	I		305,400
GRANTOR: KB HOME JACKSONVILLE						
GRANTEE: MERCER ROBERT E						

BUILDING NOTES

BUILDING DIMENSIONS

BAS=[YR=2007] W16 N5 W2 FOP=[YR=2007] N10 W20 S10 E20$ W30 S32 FGR=[YR=2007] W5 STP=[YR=2007] N3 W3 S3 E3$ W5 S23 E10 S2 E21 N12 FOP=[YR=2007] E18 N6 W18 S6$ N10 W21 N3$ S3 E21 S4 E27 N34$ PTR=E15 FUS=[YR=2007] E32 S5 E16 S34 W48 N39$ W15$.

EXTRA FEATURES

LN	OB/XF CODE	DESCRIPTION	BLD	CAP	L	W	UNITS	UT	Adj R	ADJ UNIT PRICE	ORIG COND	YEAR ON	YEAR ACTUAL	Q	% COND	OB/XF MKT VALUE	NOTES

LAND DESCRIPTION

TOTAL OB/XF 0

LN	USE CODE	CLS	LAND USE DESCRIPTION	CAP	RD	LOC ZONE	FRONT	DEPTH	TOT LND UTS	UNIT TYPE	DT	DPTH FACT	% COND	TOT ADJ	UNIT PRICE	ADJ UNIT PRICE	LAND VALUE	OTHER ADJUSTMENTS AND NOTES	YEAR	DENSITY	DECL	FRZ	YR	CONSRV
1	000100	C	RES	100	0003	PUD	0.00	0.00	1.00	LT		1.00	1.00	1.00	54,000.00	54,000.00	54,000							

REVIEW DATE 01/01/2023 BY CD Total Acres: 0.00 Total Land Value: 54,000 Market: 0 Agricultural: 0 Common: 54,000 PRINTED 07/09/2026 BY SYS