LOT 164
RIVER GLEN #1 PB 7/263

PEARCE DANIEL
65029 LAGOON FOREST DR
YULEE, FLORIDA 32097

2026

11-2N-26-1830-0164-0000

BUILDING CHARACTERISTICS

ELEMENT	CD	CONSTRUCTION
Exterior Wall	16	WD FR STUC 50
Exterior Wall	17	CB STUCCO 50
Roof Structur	03	GABLE/HIP 100
Roof Cover	03	COMP SHNGL 100
Interior Wall	05	DRYWALL 100
Interior Floo	14	CARPET 70
Interior Floo	08	SHT VINYL 30
Air Condition	03	CENTRAL 100
Heating Type	04	AIR DUCTED 100
Bedrooms		4 100
Bathrooms		2.5 100
Frame	02	WOOD FRAME 100
Stories	2.	2. 100
Units		0 100
Occupancy	00	NONE 100
Quality	03	Quality Level 03
DOR CODE	0100	SINGLE FAMILY
MAP NUM		MKT AREA 05
NEIGHBORHOOD/LOC	5009.00	

AREA TYPE	TOTAL GROSS AREA	PCT OF BASE	YEAR	TOT ADJ AREA	SUBAREA MARKET VALUE
BAS	1,228	100	2007	1,228	114,967
FGR	414	55	2007	228	21,346
FOP	28	30	2007	8	749
FSP	320	40	2007	128	11,984
FUS	1,628	100	2007	1,628	152,415
TOTALS	3,618			3,220	301,459

MARKET ADJUSTMENTS

TYPE	MDL	EFF. AREA	TOT ADJ PTS	EFF. BASE RATE	REPL. COST NEW	AYB	EYB	ECON	FNCT		NORM	% COND
0100	01	3,220	97.9800	102.88	331,274	2007	2007	0	0	0	9.00	91.00

1 SINGLE FAM 100% - 2026 Heated Area: 2856 HX Base Yr

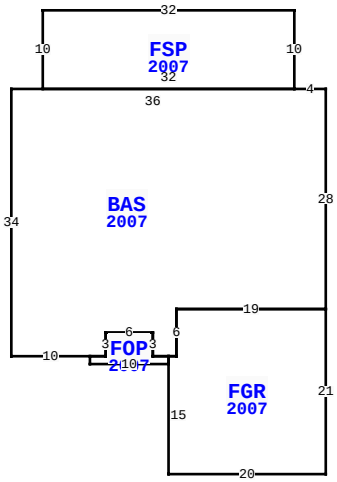

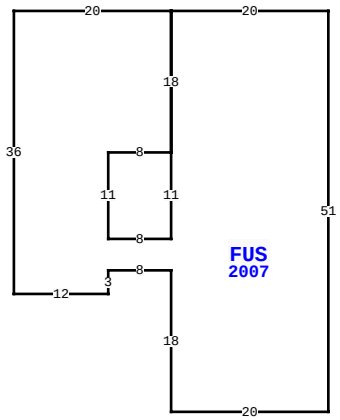

65029 LAGOON FOREST DR, YULEE

BLD DATE	07/23/2007 JM	LGL DATE	
XF DATE		LAND DATE	04/09/2026 MLU
INC DATE		AG DATE	

NASSAU COUNTY PROPERTY

PAGE 1 of 1 4

VALUATION SUMMARY

VALUATION BY		STANDARD
Tax Group: 4	Tax Dist:	
BUILDING MARKET VALUE		301,459
TOTAL MARKET OB/XF VALUE		0
TOTAL LAND VALUE - MARKET		54,000
TOTAL MARKET VALUE		355,459
SOH/AGL Deduction		0
ASSESSED VALUE		355,459
TOTAL EXEMPTION VALUE	13	355,459
BASE TAXABLE VALUE		0
TOTAL JUST VALUE		355,459
NCON VALUE		0
INCOME VALUE		
PREVIOUS YEAR MKT VALUE		352,800

PERMIT NUM	DESCRIPTION	AMT	ISSUED
C19290	CO ISSUED	236,478	01/01/2007
E18605	ELEC OTHER	2,000	01/01/2007
M12376	MECH OTHER	0	01/01/2007
R10003	REPAIR/RRF	8,000	01/01/2007
B19290	NEW CONSTR	236,478	01/01/2007
P11966	OTHER	0	01/01/2007

SALES DATA

OFF RECORD Number	DATE	TYPE INST	Q U	V I	RSN CD	SALE PRICE
2803/1810	7/25/2025	WD	Q	I	01	385,000
GRANTOR: NATIONAL RESIDENTIAL						
GRANTEE: PEARCE DANIEL						
2803/1807	3/23/2025	WD	Q	I	01	385,000
GRANTOR: RICKS MALIK T & DE'JA						
GRANTEE: NATIONAL RESIDENTIA						

BUILDING NOTES

BUILDING DIMENSIONS

FUS=[YR=2007;ORIG=35,0] S36 E12 N3 E8 S18 E20 N51 W20 S18 S11 W8 N11 E8 N18 W20 $
BAS=[YR=2007;ORIG=0,0] W4 W36 S34 E10 E2 N3 E6 S3 E2 E1 N6 E19 N28 $
FGR=[YR=2007;ORIG=-20,34] S15 E20 N21 W19 S6 W1 $
FSP=[YR=2007;ORIG=-4,0] N10 W32 S10 E32 $
FOP=[YR=2007;ORIG=-30,34] S1 E10 N1 W2 N3 W6 S3 W2 $
PTR=[ORIG=0,0] E35 W35 $
.

EXTRA FEATURES

LN	OB/XF CODE	DESCRIPTION	BLD	CAP	L	W	UNITS	UT	Adj R	ADJ UNIT PRICE	ORIG COND	YEAR ON	YEAR ACTUAL	Q	% COND	OB/XF MKT VALUE	NOTES

LAND DESCRIPTION

TOTAL OB/XF 0

LN	USE CODE	CLS	LAND USE DESCRIPTION	CAP	RD	LOC ZONE	FRONT	DEPTH	TOT LND UTS	UNIT TYPE	DT	DPTH FACT	% COND	TOT ADJ	UNIT PRICE	ADJ UNIT PRICE	LAND VALUE	OTHER ADJUSTMENTS AND NOTES	YEAR	DENSITY	DECL	FRZ	YR	CONSRV
1	000100	C	RES	100	0006	PUD	0.00	0.00	1.00	LT		1.00	1.00	1.00	54,000.00	54,000.00	54,000							

REVIEW DATE 01/31/2024 BY KBA Total Acres: 0.00 Total Land Value: 54,000 Market: 0 Agricultural: 0 Common: 54,000 PRINTED 07/09/2026 BY SYS