PT OF LOTS 19 & 20
IN OR 2105/1908 (EX PT IN R/W)
CORNWALL SURVEY S/D OF

MILLS JASON E & PAULA R
17180 CROSS BRANCH RD
HILLIARD, FL 32046

2026

10-3N-23-2020-0019-0010

NASSAU COUNTY PROPERTY

BUILDING CHARACTERISTICS

ELEMENT	CD	CONSTRUCTION
Exterior Wall	05	AVERAGE 50
Exterior Wall	20	FACE BRICK 50
Roof Structur	03	GABLE/HIP 100
Roof Cover	12	MODULAR MT 100
Interior Wall	05	DRYWALL 100
Interior Floo	14	CARPET 70
Interior Floo	11	CLAY TILE 30
Air Condition	03	CENTRAL 100
Heating Type	04	AIR DUCTED 100
Bedrooms		2 100
Bathrooms		2 100
Frame	02	WOOD FRAME 100
Stories	2.	2. 100
Units		0 100
Occupancy	00	NONE 100
Quality	01	Quality Level 01
DOR CODE	0100	SINGLE FAMILY
MAP NUM		MKT AREA 09
NEIGHBORHOOD/LOC	9001.00	

AREA TYPE	TOTAL GROSS AREA	PCT OF BASE	YEAR	TOT ADJ AREA	SUBAREA MARKET VALUE
BAS	1,044	100	1993	1,044	107,789
FGR	780	55	1996	429	44,292
FOP	288	30	1993	86	8,879
FSP	324	40	1993	130	13,422
FUS	660	100	1993	660	68,143
FUS	792	100	1993	792	81,771
TOTALS	3,888			3,141	324,296

MARKET ADJUSTMENTS

TYPE	MDL	EFF. AREA	TOT ADJ PTS	EFF. BASE RATE	REPL. COST NEW	AYB	EYB	ECON	FNCT		NORM	% COND
0900	01	3,141	90.5832	125.91	395,483	1991	1996	0	0	0	18.00	82.00

1 SNGL FAM 100% - 2018 Heated Area: 2496 HX Base Yr 2018

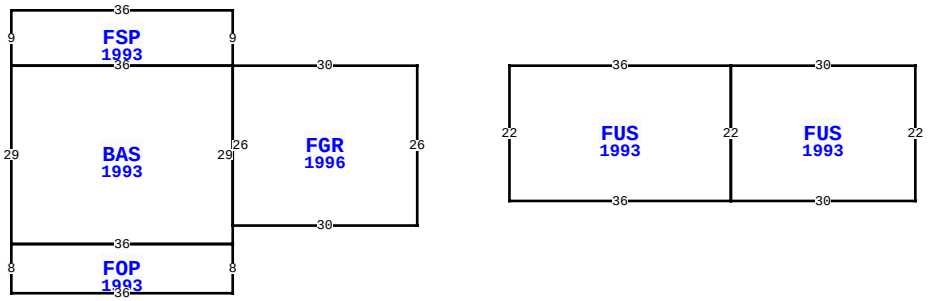

VALUATION SUMMARY

VALUATION BY		STANDARD
Tax Group: 4	Tax Dist:	
BUILDING MARKET VALUE		324,296
TOTAL MARKET OB/XF VALUE		51,330
TOTAL LAND VALUE - MARKET		190,000
TOTAL MARKET VALUE		565,626
SOH/AGL Deduction		238,470
ASSESSED VALUE		327,156
TOTAL EXEMPTION VALUE	HX HB	51,411
BASE TAXABLE VALUE		275,745
TOTAL JUST VALUE		565,626
NCON VALUE		0
INCOME VALUE		
PREVIOUS YEAR MKT VALUE		563,217

PERMIT NUM	DESCRIPTION	AMT	ISSUED
2000833	SWIM POOL	32,500	01/29/2020
17006888	REPAIR/RRF	6,500	11/03/2017
B973668	MH MOVE-ON	39,676	02/01/1997
P961657	GARAGE	0	08/01/1996

SALES DATA

OFF RECORD Number	DATE	TYPE INST	Q / U	V / I	RSN CD	SALE PRICE
2105/1908	2/28/2017	WD	Q	I	01	280,000
GRANTOR: COCHRANE WILLIAM N II						
GRANTEE: MILLS JASON E & PAU						
0596/0501	5/03/1990	WD	Q	V		10,100
GRANTOR: MCINTOSH GRADY & N J						
GRANTEE: COCHRANE WM N III						

17180 CROSS BRANCH RD, HILLIARD

BLD DATE		LGL DATE	
XF DATE		LAND DATE	05/12/2026 MLU
INC DATE		AG DATE	

BUILDING NOTES

EXTRA FEATURES

LN	OB/XF CODE	DESCRIPTION	BLD	CAP	L	W	UNITS	UT	Adj R	ADJ UNIT PRICE	ORIG COND	YEAR ON	YEAR ACTUAL	Q	% COND	OB/XF MKT VALUE	NOTES
1	0504	FP-ELECTRI	0	100	0	0	1.00	UT	2,000.00	2,000.00	100	1991	1991	3	66	1,320	
4	0754	FOP	0	100	20	18	360.00	SF	15.00	15.00	100	2007	2007	3	24	1,296	
5	0300	BOAT DCK W	0	100	22	6	132.00	SF	40.00	40.00	100	1997	1997	3	23	1,214	
6	0860	POOL/SPA	0	100	0	0	1.00	UT	50,000.00	50,000.00	100	2020	2020	04	95	47,500	

BUILDING DIMENSIONS

FGR=[YR=1996] W30 FSP=[YR=1993] N9 W36 S9 BAS=[YR=1993] S29 FOP=[YR=1993] S8 E36 N8 W36 $ E36 N29 W36 $ E36 $ S26 E30 N26 $ PTR= E15 FUS=[YR=1993] E36 FUS=[YR=1993] E30 S22 W30 N22$ S22 W36 N22 $ W15 $.

LAND DESCRIPTION

TOTAL OB/XF 51,330

LN	USE CODE	CLS	LAND USE DESCRIPTION	CAP	RD	LOC ZONE	FRONT	DEPTH	TOT LND UTS	UNIT TYPE	DT	DPTH FACT	% COND	TOT ADJ	UNIT PRICE	ADJ UNIT PRICE	LAND VALUE	OTHER ADJUSTMENTS AND NOTES	YEAR	DENSITY	DECL	FRZ	YR	CONSRV
1	000100	C	RES	100	0005	OR	0.00	0.00	10.00	AC		1.00	1.00	1.00	19,000.00	19,000.00	190,000							

REVIEW DATE 01/01/2023 BY CD Total Acres: 10.00 Total Land Value: 190,000 Market: 0 Agricultural: 0 Common: 190,000 PRINTED 07/09/2026 BY SYS