PT NE1/4 OF SW1/4
IN OR 2583/1886
ESMT IN OR 2611-1856

PICKETT TIMOTHY R & SUZANNE B
17360 CROSS BRANCH RD
HILLIARD, FL 32046

2026

10-3N-23-0000-0008-0030

NASSAU COUNTY PROPERTY

BUILDING CHARACTERISTICS

ELEMENT	CD	CONSTRUCTION
Exterior Wall	31	HARDIE BRD 90
Exterior Wall	20	FACE BRICK 10
Roof Structur	03	GABLE/HIP 100
Roof Cover	03	COMP SHNGL 100
Interior Wall	05	DRYWALL 100
Interior Floo	13	LVT/LAMNT 100
Interior Floo	01	NONE 0
Air Condition	03	CENTRAL 100
Heating Type	04	AIR DUCTED 100
Bedrooms		3 100
Bathrooms		2 100
Frame	02	WOOD FRAME 100
Stories	1.	1. 100
Units		0 100
Quality	05	Quality Level 05
DOR CODE	0100	SINGLE FAMILY
MAP NUM		MKT AREA 09
NEIGHBORHOOD/LOC	9001.00	

AREA TYPE	TOTAL GROSS AREA	PCT OF BASE	YEAR	TOT ADJ AREA	SUBAREA MARKET VALUE
BAS	1,679	100	2023	1,679	277,575
FGR	528	55	2024	290	47,944
FOP	136	30	2023	41	6,778
FOP	203	30	2023	61	10,085
PTO	136	5	2025	7	1,157
TOTALS	2,682			2,078	343,539

MARKET ADJUSTMENTS

TYPE	MDL	EFF. AREA	TOT ADJ PTS	EFF. BASE RATE	REPL. COST NEW	AYB	EYB	ECON	FNCT		NORM	% COND
0900	01	2,078	119.6580	166.32	345,613	2023	2023	0	0	0	0.60	99.40

1 SNGL FAM 100% - 2024 Heated Area: 1679 HX Base Yr 2024

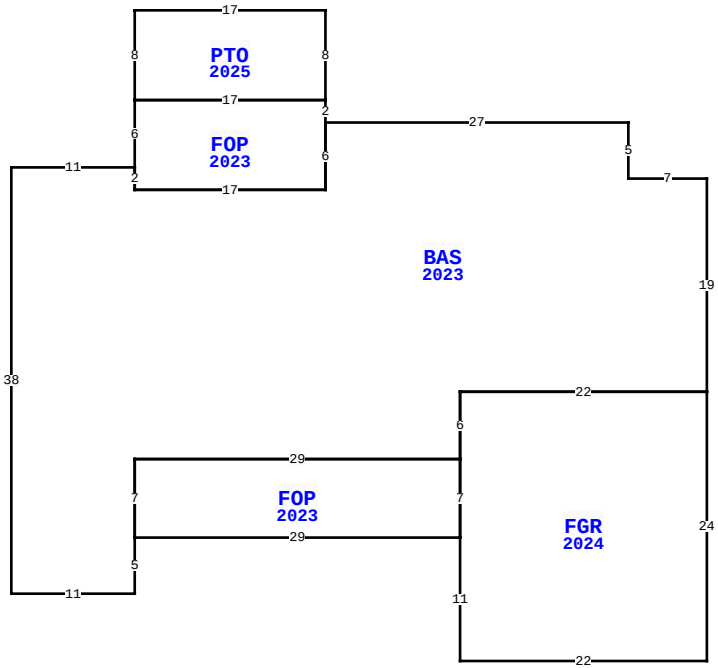

17360 CROSS BRANCH RD, HILLIARD

BLD DATE		LGL DATE	
XF DATE		LAND DATE	05/12/2026 MLU
INC DATE		AG DATE	

NASSAU COUNTY PROPERTY — VALUATION SUMMARY

VALUATION BY		STANDARD
Tax Group: 4	Tax Dist:	
BUILDING MARKET VALUE		361,646
TOTAL MARKET OB/XF VALUE		3,465
TOTAL LAND VALUE - MARKET		133,980
TOTAL MARKET VALUE		499,091
SOH/AGL Deduction		225,146
ASSESSED VALUE		273,945
TOTAL EXEMPTION VALUE	HX HB	51,411
BASE TAXABLE VALUE		222,534
TOTAL JUST VALUE		499,091
NCON VALUE		0
INCOME VALUE		
PREVIOUS YEAR MKT VALUE		476,345

PERMIT NUM	DESCRIPTION	AMT	ISSUED
230008312	CO ISSUED		06/28/2023
23003242	GARAGE	0	03/13/2023
22016898	NEW CONSTR	318,906	11/14/2022

SALES DATA

OFF RECORD Number	DATE	TYPE INST	Q / U	V / I	RSN CD	SALE PRICE
2583/1886	8/12/2022	WD	U	V	11	100

GRANTOR: SPURLOCK SARAH BELL &
GRANTEE: PICKETT TIMOTHY ROG

BUILDING NOTES

BUILDING DIMENSIONS

BAS=[YR=2023;ORIG=130,0] W7 N5 W27 S6 W17 N2 W11 S38 E11 N5 N7 E29 N6 E22 N19 $
FGR=[YR=2024;ORIG=130,19] W22 S6 S7 S11 E22 N24 $
FOP=[YR=2023;ORIG=108,25] W29 S7 E29 N7 $
FOP=[YR=2023;ORIG=96,-7] W17 S6 S2 E17 N6 N2 $
PTO=[YR=2025;ORIG=79,-7] N8 E17 S8 W17 $
.

EXTRA FEATURES

LN	OB/XF CODE	DESCRIPTION	BLD	CAP	L	W	UNITS	UT	Adj R	ADJ UNIT PRICE	ORIG COND	YEAR ON	YEAR ACTUAL	Q	% COND	OB/XF MKT VALUE	NOTES
2	0500	FP-PRE FAB	0	100	0	0	1.00	UT	3,500.00	3,500.00	100	2024	2023		99	3,465	

LAND DESCRIPTION

TOTAL OB/XF 3,465

LN	USE CODE	CLS	LAND USE DESCRIPTION	CAP	RD	LOC ZONE	FRONT	DEPTH	TOT LND UTS	UNIT TYPE	DT	DPTH FACT	% COND	TOT ADJ	UNIT PRICE	ADJ UNIT PRICE	LAND VALUE	OTHER ADJUSTMENTS AND NOTES	YEAR	DENSITY	DECL	FRZ	YR	CONSRV
1	000100	C	RES	100		OR			6.38	AC		1.00	1.00	1.00	21,000.00	21,000.00	133,980							

REVIEW DATE 01/14/2025 BY WWA Total Acres: 6.38 Total Land Value: 133,980 Market: 0 Agricultural: 0 Common: 133,980 PRINTED 07/09/2026 BY SYS

PT NE1/4 OF SW1/4
IN OR 2583/1886
ESMT IN OR 2611-1856

PICKETT TIMOTHY R & SUZANNE B
17360 CROSS BRANCH RD
HILLIARD, FL 32046

2026

10-3N-23-0000-0008-0030

NASSAU COUNTY PROPERTY

BUILDING CHARACTERISTICS

ELEMENT	CD	CONSTRUCTION
Exterior Wall	25	MOD METAL 100
Roof Structur	10	STEEL FRME 100
Roof Cover	12	MODULAR MT 100
Interior Wall	07	NONE 100
Interior Floo	03	CONC FINSH 100
Air Condition	01	NONE 100
Heating Type	01	NONE 100
Bedrooms		0 100
Bathrooms		0 100
Frame	05	STEEL 100
Quality	05	Quality Level 05

DOR CODE 0100 SINGLE FAMILY
MAP NUM | MKT AREA 09
NEIGHBORHOOD/LOC 9001.00

AREA TYPE	TOTAL GROSS AREA	PCT OF BASE	YEAR	TOT ADJ AREA	SUBAREA MARKET VALUE
BAS	600	100	2024	600	14,018
FCP	160	25	2025	40	935
FCP	300	25	2025	75	1,752
UCP	300	20	2025	60	1,402
TOTALS	1,360			775	18,107

MARKET ADJUSTMENTS

TYPE	MDL	EFF. AREA	TOT ADJ PTS	EFF. BASE RATE	REPL. COST NEW	AYB	EYB	ECON	FNCT		NORM	% COND
6500	01	775	60.5000	23.60	18,290	2024	2024	0	0	0	1.00	99.00

2 GARAGE RES 100% - 2025 Heated Area: 600 HX Base Yr 2024

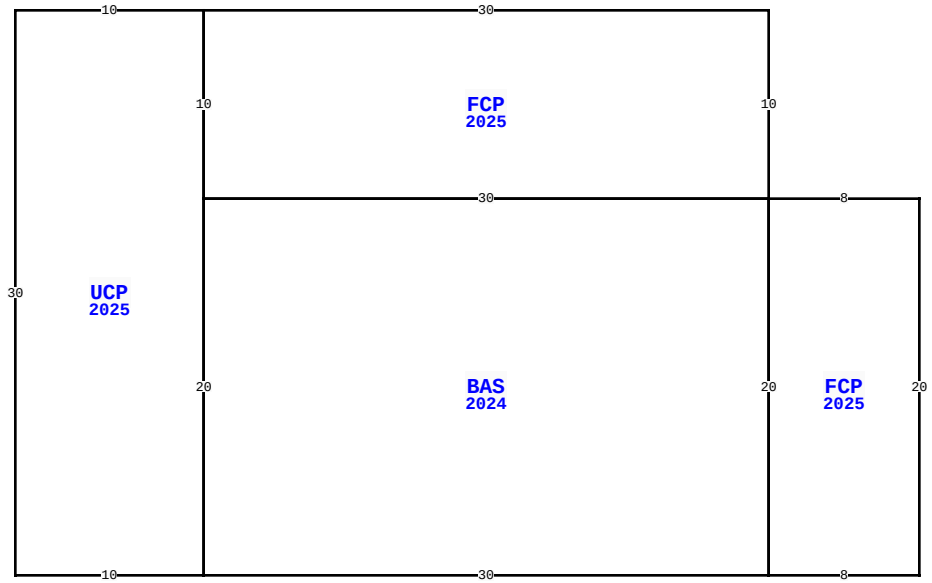

17360 CROSS BRANCH RD, HILLIARD

BLD DATE		LGL DATE	
XF DATE		LAND DATE	05/12/2026 MLU
INC DATE		AG DATE	

VALUATION SUMMARY

VALUATION BY		STANDARD
Tax Group: 4	Tax Dist:	
BUILDING MARKET VALUE		361,646
TOTAL MARKET OB/XF VALUE		3,465
TOTAL LAND VALUE - MARKET		133,980
TOTAL MARKET VALUE		499,091
SOH/AGL Deduction		225,146
ASSESSED VALUE		273,945
TOTAL EXEMPTION VALUE	HX HB	51,411
BASE TAXABLE VALUE		222,534
TOTAL JUST VALUE		499,091
NCON VALUE		0
INCOME VALUE		
PREVIOUS YEAR MKT VALUE		476,345

PERMIT NUM	DESCRIPTION	AMT	ISSUED

SALES DATA

OFF RECORD Number	DATE	TYPE INST	Q / U	V / I	RSN CD	SALE PRICE
2583/1886	8/12/2022	WD	U	V	11	100

GRANTOR: SPURLOCK SARAH BELL &
GRANTEE: PICKETT TIMOTHY ROG

BUILDING NOTES

BUILDING DIMENSIONS

BAS=[YR=2024;ORIG=50,20] E30 S20 W30 N20 $
FCP=[YR=2025;ORIG=50,10] E30 S10 W30 N10 $
FCP=[YR=2025;ORIG=80,20] E8 S20 W8 N20 $
UCP=[YR=2025;ORIG=40,10] E10 S10 S20 W10 N30 $
.

EXTRA FEATURES

L N	OB/XF CODE	DESCRIPTION	BLD	CAP	L	W	UNITS	UT	Adj R	ADJ UNIT PRICE	ORIG COND	YEAR ON	YEAR ACTUAL	Q	% COND	OB/XF MKT VALUE	NOTES

LAND DESCRIPTION

TOTAL OB/XF 0

L N	USE CODE	CLS	LAND USE DESCRIPTION	CAP	R D	LOC ZONE	FRONT	DEPTH	TOT LND UTS	UNIT TYPE	D T	DPTH FACT	% COND	TOT ADJ	UNIT PRICE	ADJ UNIT PRICE	LAND VALUE	OTHER ADJUSTMENTS AND NOTES	YEAR	DENSITY	DECL	FRZ	YR	CONSRV

REVIEW DATE 01/14/2025 BY WWA Total Acres: 6.38 Total Land Value: 133,980 Market: 0 Agricultural: 0 Common: 133,980 PRINTED 07/09/2026 BY SYS